CAME

CAME.COM

FA00945-EN

Sliding gate operator
BX series

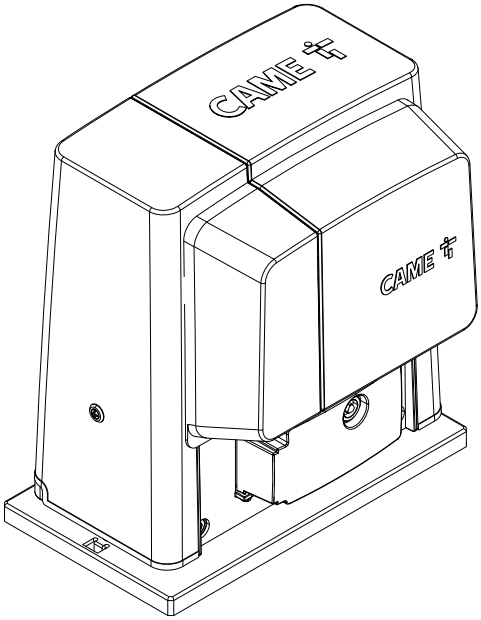

BX704AGS / 708AGS
BX708RGS

INSTALLATION MANUAL

EN English

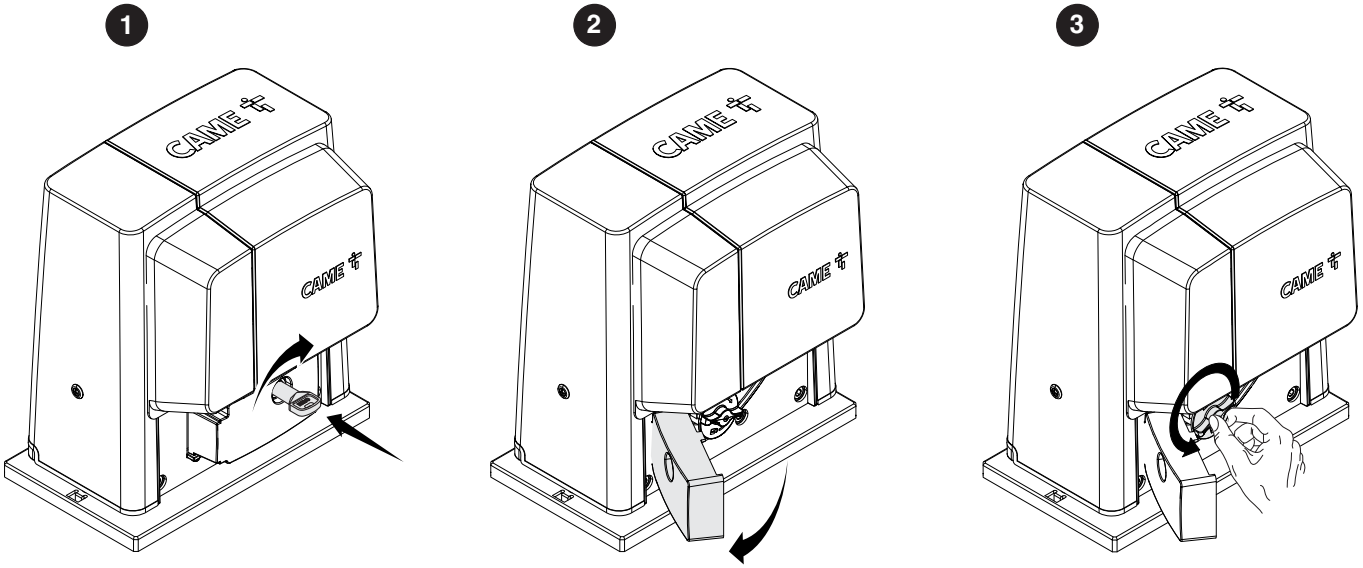
1
2
3
CAME

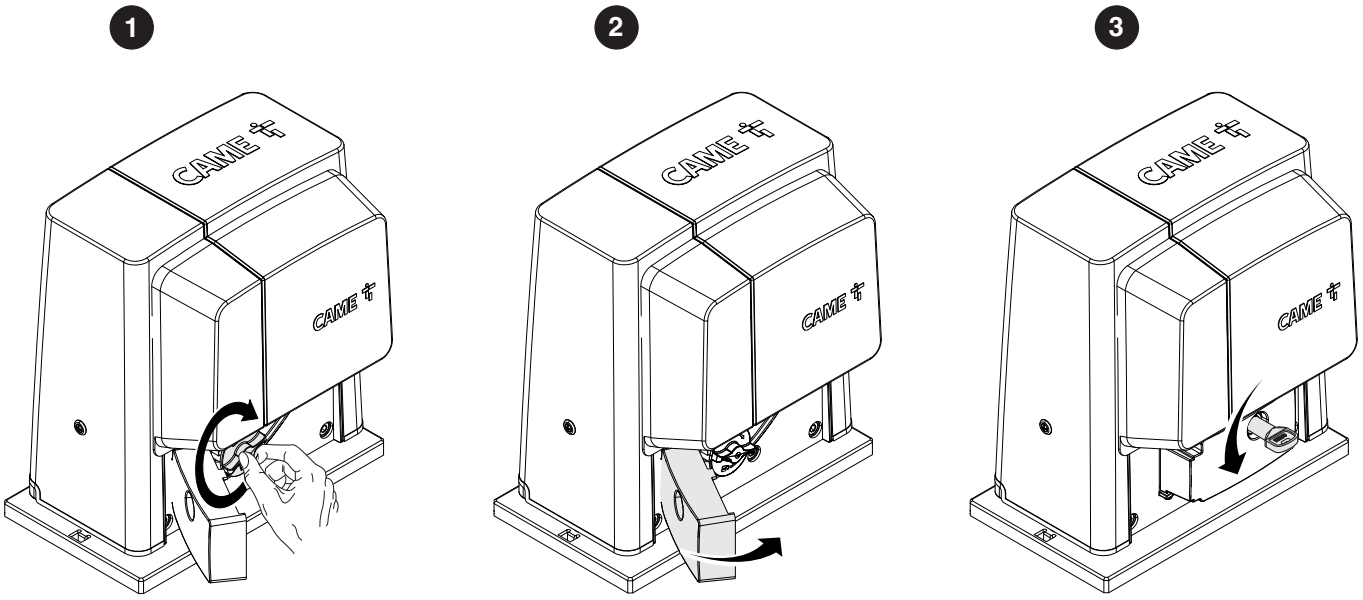
1
2
3
CAME

GENERAL PRECAUTIONS FOR INSTALLERS

⚠ WARNING! Important safety instructions.
Follow all of these instructions. Improper installation can cause serious bodily harm.
Before continuing, also read the general precautions for users.

This product must only be used for its specifically intended purpose. any other use may be hazardous. Came S.p.A. is not liable for any damage caused by improper, wrongful and unreasonable use. • This manual's product is defined by machinery directive 2006/42/CE as "partly-completed machinery". Partly-completed machinery is a set that almost constitutes a machine, but which, alone, cannot ensure a clearly defined application. Partly-completed machinery must only be incorporated or assembled to other machinery or other partly-completed machinery or apparatuses to build machinery that is regulated by Directive 2006/42/CE. The finalized installation must comply with European Directive 2006/42/CE and with currently applicable European standards. • Given these considerations, all procedures stated in this manual must be exclusively performed by expert, qualified staff • The manufacturer declines any liability for using non-original products; which would result in warranty loss • Keep this manual inside the technical folder along with the manuals of all the other devices used for your automation system. • Make sure the temperature range shown on the product is suitable for the climate where it will be installed • Laying the cables, installation and testing must follow state-of-the-art procedures as dictated by regulations • If the power-supply cable is damaged, it must be immediately replaced by the manufacturer or by an authorized technical assistance center, or in any case, by qualified staff, to prevent any risk • During all phases of the installation make sure you have cut off the mains power source. • The operator cannot be used with gates fitted with pedestrian doors, unless its operation can be activated only when the pedestrian door is in safety position. • Make sure that people are not entrapped between the gate's moving and fixed parts due to the gate's movement. Before installing the operator, check that the gate is in proper mechanical condition, that it is properly balanced and that it properly closes: if any of these conditions are not met, do not continue before having met all safety requirements. • Make sure the gate is stable and the castors function properly and are well-greased, and that it opens and closes smoothly. • The guide rail must be well-fastened to the ground, entirely above the surface and free of any impediments to the gate's movement. • The rails of the upper guide must not cause any friction. • Make sure that opening and closing limiters are fitted • Make sure the operator is installed onto a sturdy surface that is protected from any collisions • Make sure that mechanical stops are already installed • If the operator is installed lower than 2.5 from the ground or from any other access level, fit any protections and signs to prevent hazardous situations. • Do not fit the operator upside down or onto elements that could yield to its weight. If necessary, add reinforcements to the fastening points • Do not install door or gate leaves on tilted surfaces • Check that no lawn watering devices spray the operator with water from the bottom up. • Any residual risks must be indicated clearly with proper signage affixed in visible areas. All of which must be explained to end users. • Suitably section off and demarcate the entire installation site to prevent unauthorized persons from entering the area, especially minors and children. • Affix cautionary signs, such as the door plate, the gate plate, wherever needed and in plain sight. • Use proper protections to prevent mechanical hazards when people are loitering around the machinery's range of action, for example to prevent finger crushing between the rack and pinion) • The electrical cables must run through the cable glands and must not touch any heated parts, such as the motor, transformer, and so on) • Make sure you have set up a suitable dual pole cut off device along the power supply that is compliant with the installation rules. It should completely cut off the power supply according to category III surcharge conditions • All opening controls must be installed at least 1.85 m from the perimeter of the gate's working area, or where they cannot be reached from outside the gate. • All switches in maintained action mode must be positioned so that the moving gates leaves, the transit areas and vehicle thru-ways are completely visible, and yet the switches must be also away from any moving parts • Unless the action is key operated, the control devices must be fitted at, at least, 1.5 m from the ground and must not be accessible to the public. • To pass the collision force test use a suitable sensitive safety-edge. Install it properly and adjust as needed. • Before handing over to users, check that the system is compliant with the 2006/42/CE uniformed Machinery Directive • Make sure the settings on the operator are all suitable and that any safety and protection devices, and also the manual release, work properly. • Affix a permanent tag, that describes how to use the manual release mechanism, close to the mechanism. • Make sure to hand over to the end user, all operating manuals for the products that make up the final machinery.

- The next figure shows the main hazard points for people -

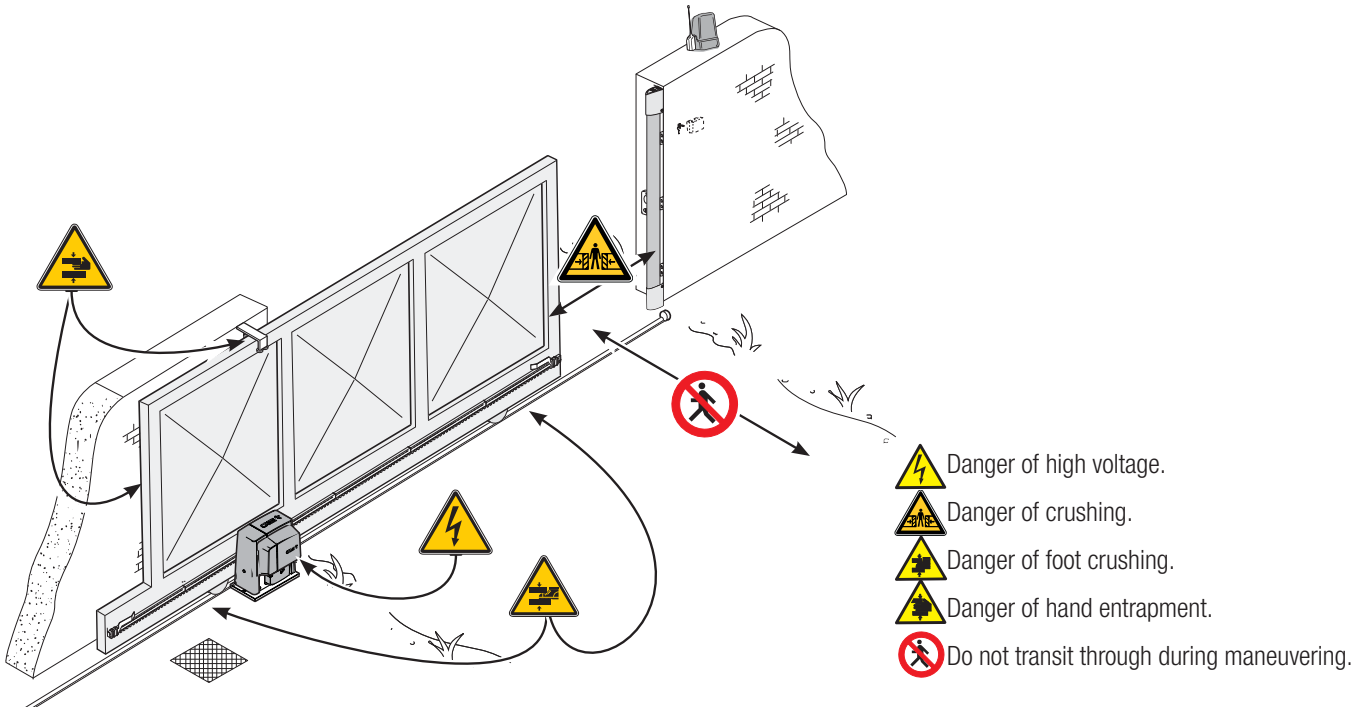

KEY

🕮 This symbol shows which parts to read carefully.
⚠ This symbol shows which parts describe safety issues
☞ This symbol shows which parts to tell users about.

The measurements, unless otherwise stated, are in millimeters.

DESCRIPTION

BX704AGS Operator (tested in compliance with EUROPEAN STANDARDS on shock forces) featuring a control board, movement control and obstruction detecting device plus mechanical limit-switches for sliding gates weighing up to 400 kg.

BX708AGS Operator featuring a control board, movement control and obstruction detecting device plus mechanical limit-switches for sliding gates weighing up to 800 kg.

INTENDED USE

The BX704AGS operator is designed to power sliding gates in single homes; whereas the BX708AGS is also suitable for apartment blocks.

🕮 Do not install of use this device in any way, except as specified in this manual.

INTENDED USE

Model	BX704AGS	BX708AGS BX708RGS
Standard reference* length of the sliding part (m)	4	
Maximum weight of the sliding part (kg)	400	800
Pinion module	4	

* For other-than-standard measurements, see the following graphs.

TECHNICAL DATA

Datum	BX704AGS	BX708AGS	BX708RGS
Protection rating (IP)	44		
Power supply (V - 50/60 Hz)	230 AC		120 AC
Input voltage to motor (V - 50/60 Hz)			110 AC
Stand-by consumption (W)	2.6	2.4	2.4
Consumption with Green Power (W)	0.5		
Power (W)	420	530	420
Thrust (N)	300	800	800
Opening speed (m/min)	10		
Operating temperature (°C)	-20 to +55		
Condenser (µF)	12	20	
Apparatus class	I		
Motor's heat protection (°C)	150		
Weight (Kg)	15		

DIMENSIONS

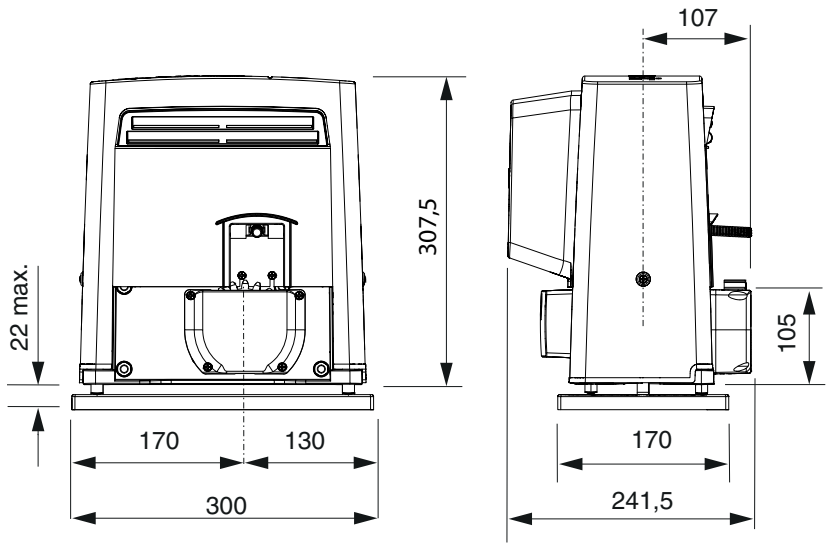

DUTY CYCLES

Datum	BX704AGS / BX708AGS BX7080RGS
Cycles/hour (no.)	17
Consecutive cycles (no.)	6

The cycles calculation refers to a gate that **has a standard reference length** (see the intended use), that are professionally installed, free of any mechanical issues and/or accidental friction points, and measured at 20° C, as stated in EN Standard 60335-2-103.
When using other-than-standard measurements, see the graphs below.

- **Cycles/hour graph**

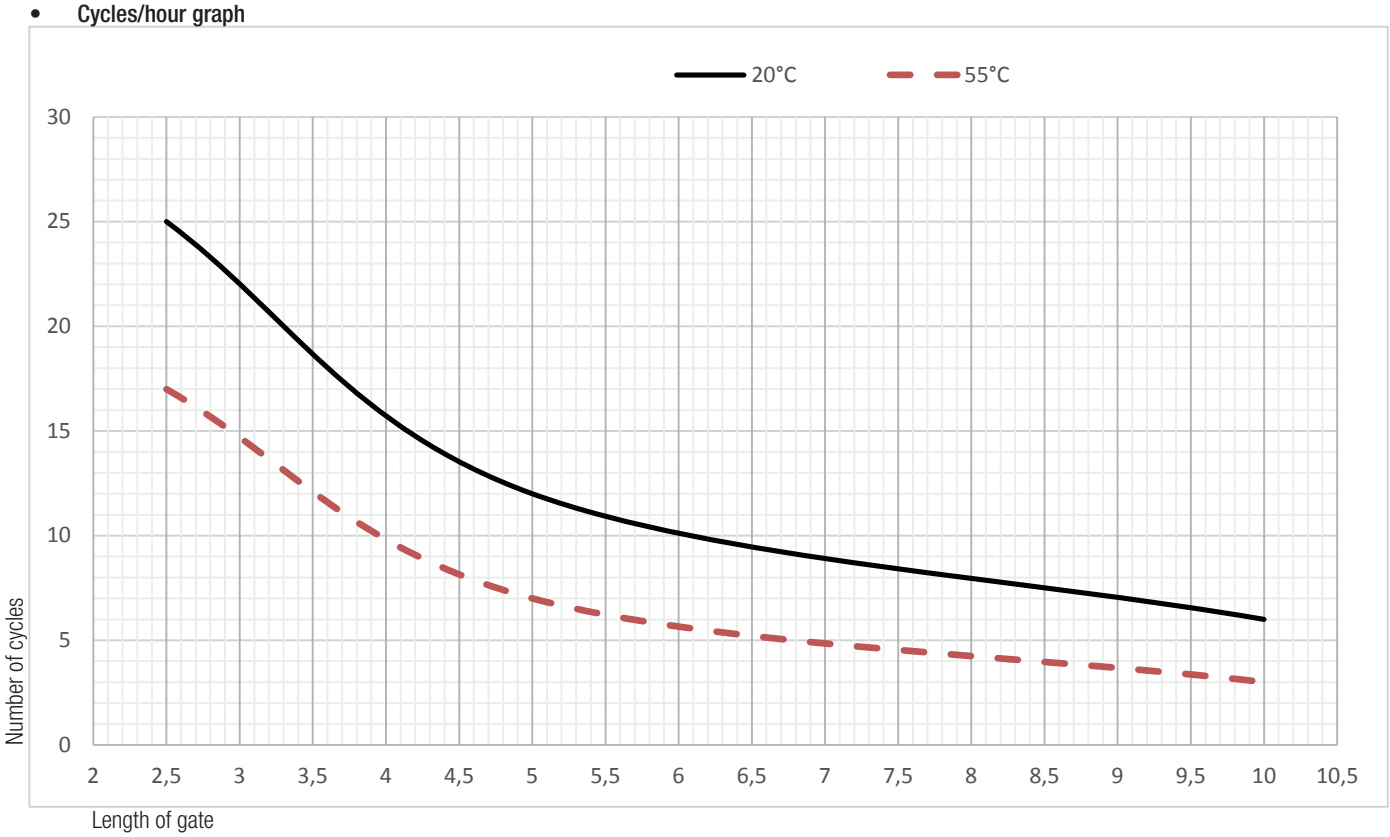

- **Consecutive cycles graph**

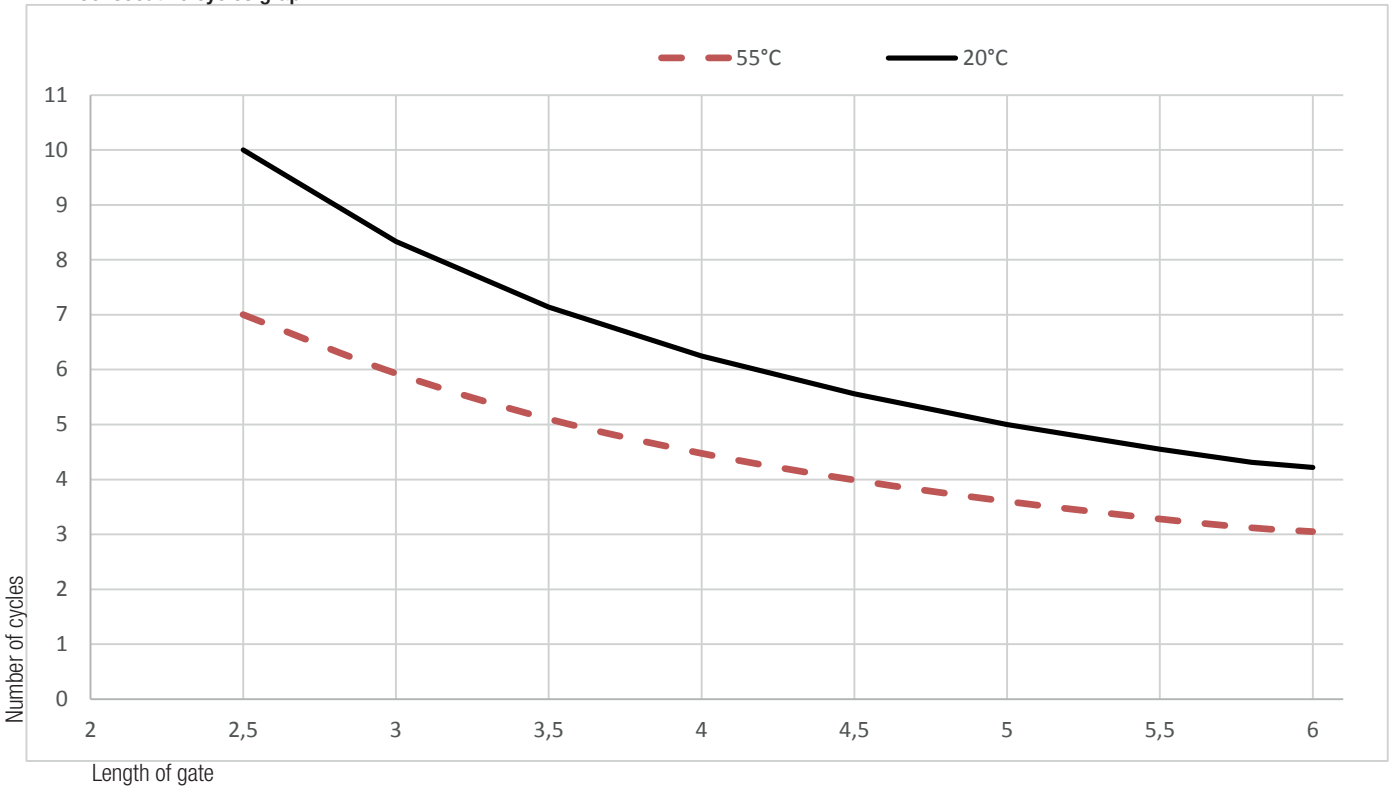

DESCRIPTION OF PARTS

1. Cover
2. Front cover
3. Gear motor
4. Condenser
5. Mechanical limit switch
6. Anchoring plate
7. Control board rack
8. ZBX7N control board
9. Limit-switch fins
10. Transformer
11. Release hatch
12. Fastening hardware
13. Mounting brace for housing accessories (optional)

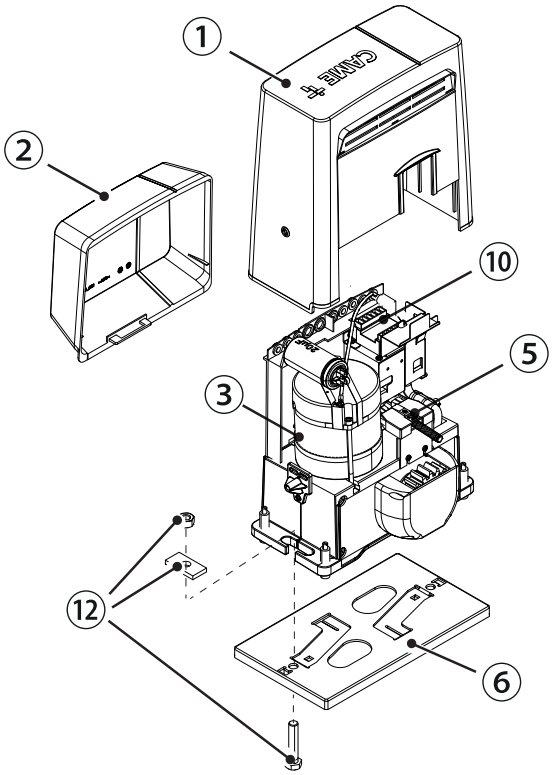

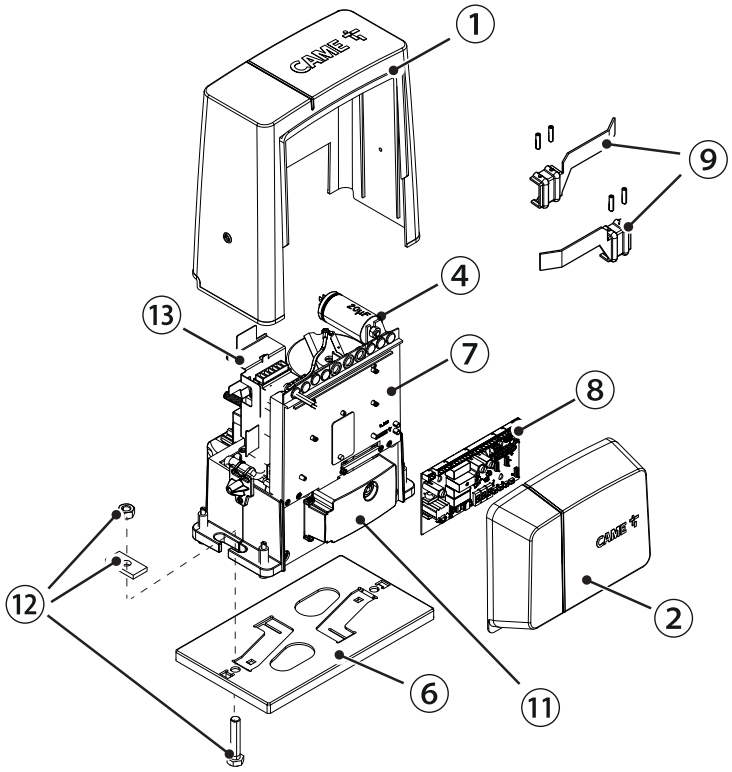

STANDARD INSTALLATION

1. Operator
2. Limit-switch fins
3. Rack
4. Key-switch selector
5. Antenna
6. Flashing light
7. Photocells
8. Posts
9. Mechanical gate stop
10. Sensitive safety-edge
11. Junction pit

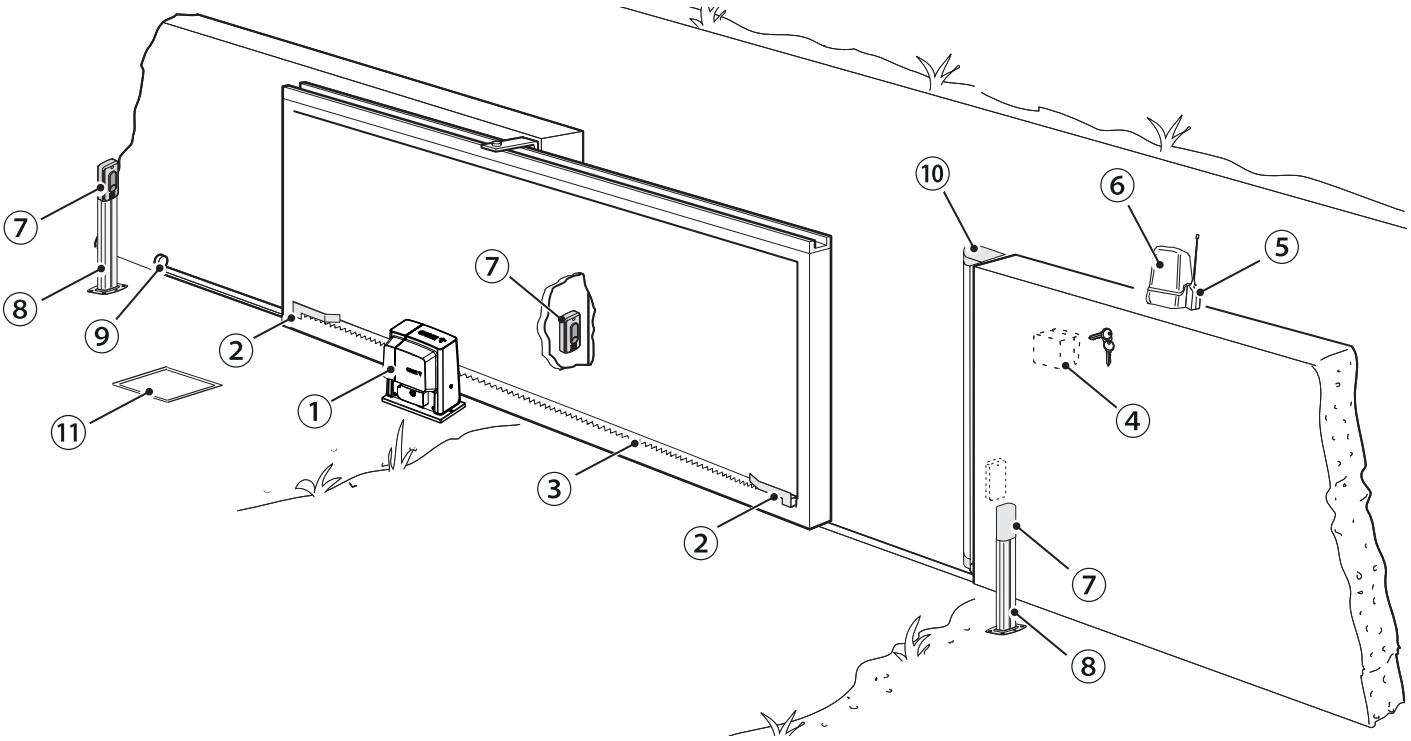

GENERAL INSTALLATION INDICATIONS

⚠ Only skilled, qualified staff must install this product.

PRELIMINARY CHECKS

⚠ Before beginning the installation, do the following:
- check that the upper slide-guides are friction-free;
- check that the gate is stable and that the casters are in good working order and lubricated;
- check that the ground rails are well-fastened, entirely on the surface and are smooth and level so as not to obstruct the gate's movement;
- make sure you have fitted opening and closing mechanical gate stops;
- make sure that the point where theoperator is fastened is protected from any impacts and that the surface is solid enough;
- set up suitable tubes and conduits for the electric cables to pass through, making sure they are protected from any mechanical damage.

CABLE TYPES AND MINIMUM THICKNESSES

Connection	cable length	
	< 20 m	20 < 30 m
Input voltage for 230 V AC control board (1P+N+PE)	3G x 1.5 mm^2	3G x 2.5 mm^2
Flashing light	2 x 0.5 mm^2	
Command and control devices	2 x 0.5 mm^2	
TX Photocells	2 x 0.5 mm^2	
RX photocells	4 x 0.5 mm^2	

🕮 When operating at 230 V and outdoors, use H05RN-F-type cables that are 60245 IEC 57 (IEC) compliant; whereas indoors, use H05VV-F-type cables that are 60227 IEC 53 (IEC) compliant. For power supplies up to 48 V, you can use FROR 20-22 II-type cables that comply with EN 50267-2-1 (CEI).

🕮 To connect the antenna, use the RG58 (we suggest up to 5 m).

🕮 For paired connection and CRP, use a UTP CAT5-type cable (up to 1,000 m long).

🕮 If cable lengths differ from those specified in the table, establish the cable sections depending on the actual power draw of the connected devices and according to the provisions of regulation CEI EN 60204-1.

🕮 For multiple, sequential loads along the same line, the dimensions on the table need to be recalculated according to the actual power draw and distances. For connecting products that are not contemplated in this manual, see the literature accompanying said products

INSTALLING

⚠The following illustrations are mere examples in that the space for fastening the operator and accessories varies depending on the installation area. It is up to the fitter, therefore, to choose the most suitable solution.

🕮 The drawing show an operator fitted on the left.

LAYING THE CORRUGATED TUBES

Dig a hole for the foundation frame.
Set up the corrugated tubes needed for the wiring coming out of the junction pit.
For connecting the gearmotor we suggest using a Ø 40 mm corrugated tube, whereas for the accessories we suggest Ø 25 mm tubes.
🕮 The number of tubes depends on the type of system and the accessories you are going to fit.

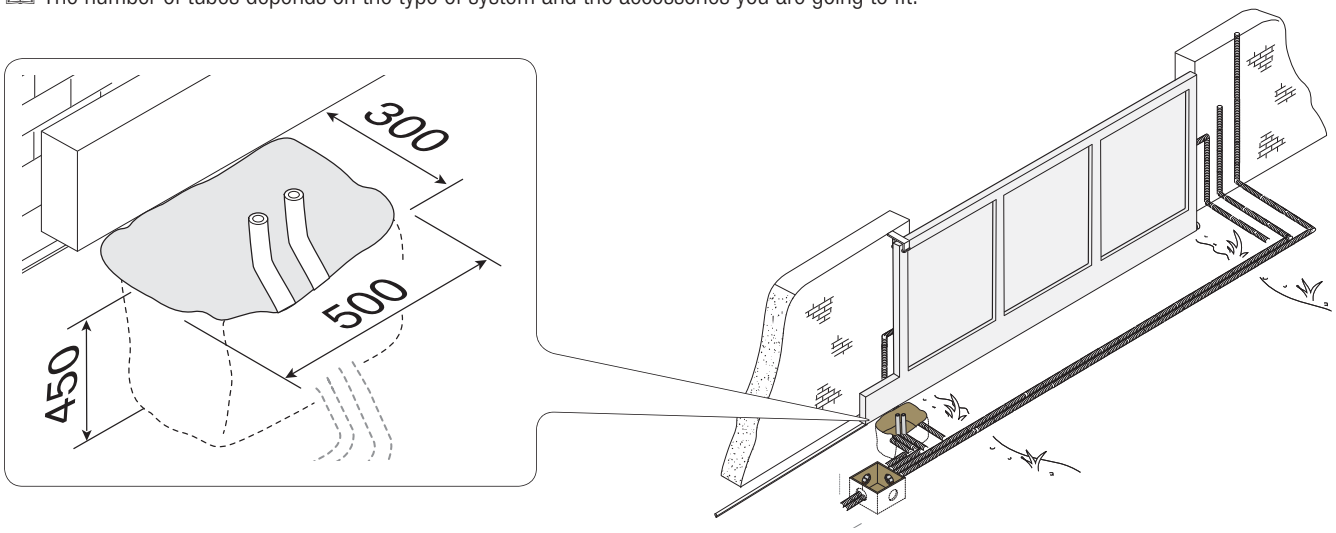

FITTING THE ANCHORING PLATE

Set up a foundation frame that is larger than the anchoring plate and sink it into the dug hole. The foundation frame must jut out by 50 mm above ground level.
Fit an iron cage into the foundation frame to reinforce the concrete.

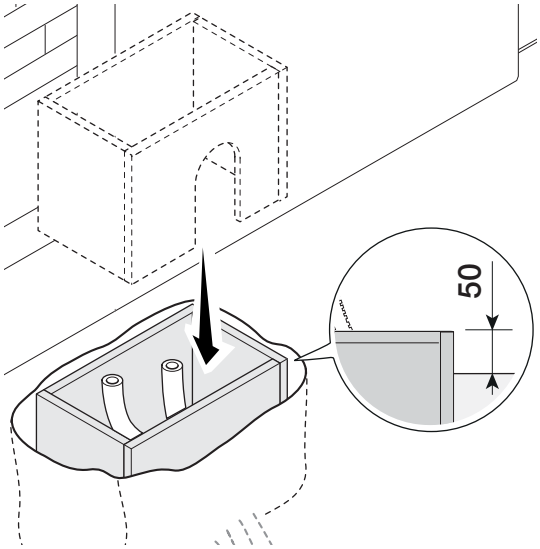

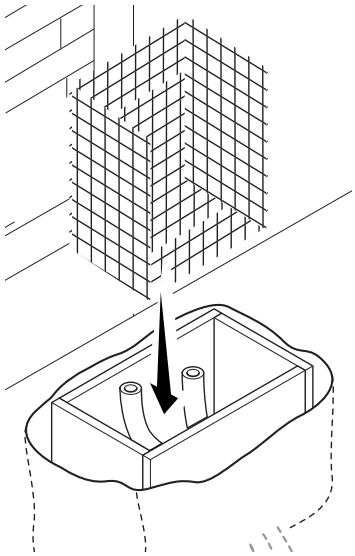

Fit the bolts into the anchoring plate and tighten them using the nuts. Remove the pre-shaped clamps using a screw driver or pliers.
Place the plate over the iron cage. Careful! The tubes must pass through their corresponding holes.

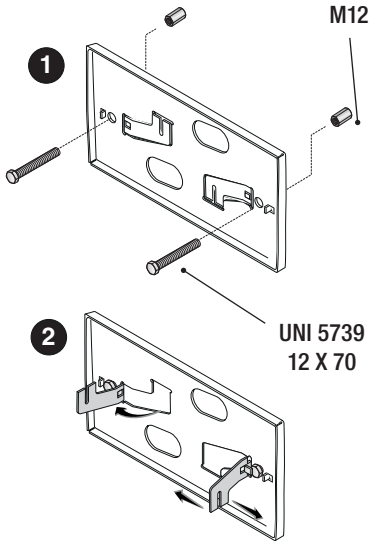

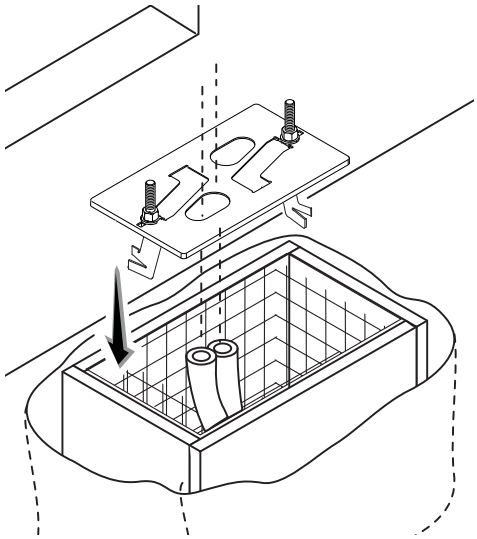

If the rack is already there, place the anchoring plate, being careful to respect the measurements shown in the drawing.
Fill the foundation frame with concrete. The plate must be perfectly level with the bolts which are entirely above surface.
Wait at least 24 hrs for the concrete to solidify.

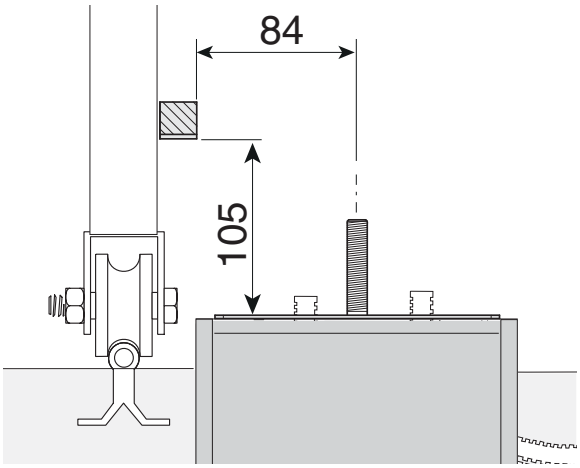

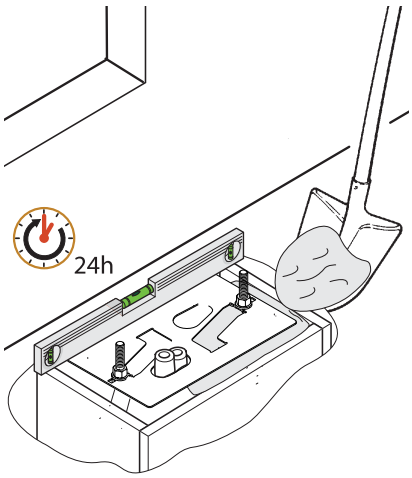

Remove the foundation frame and fill the hole with earth around the concrete block.

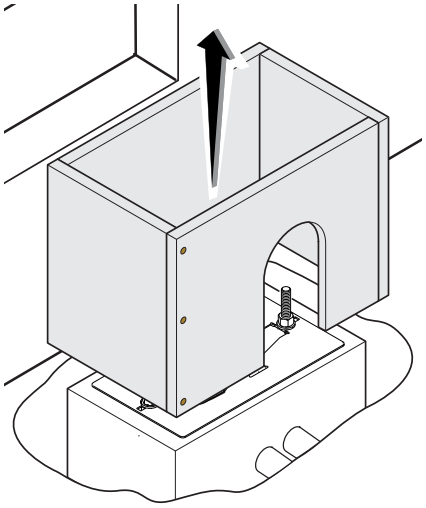

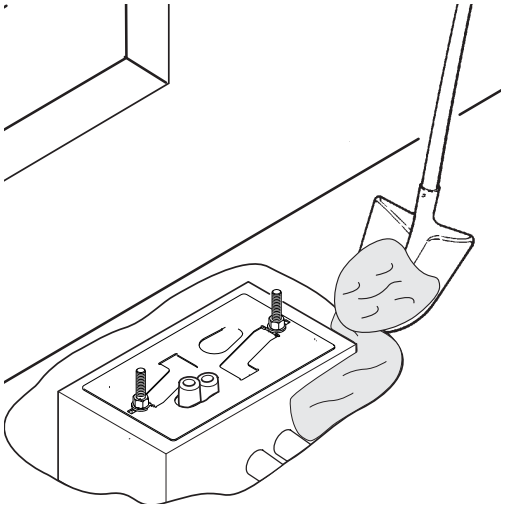

Remove the nuts from the bolts.
Fit the electric cables into the tubes so that they come out about 600 mm.

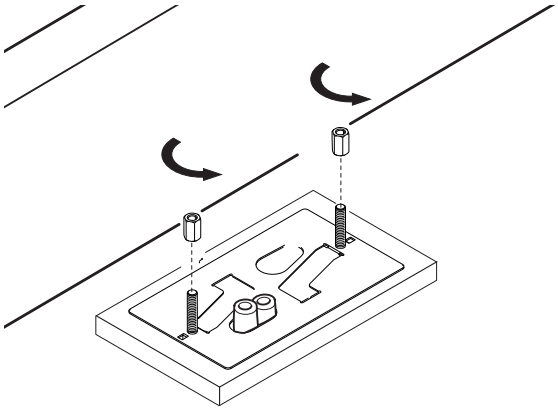

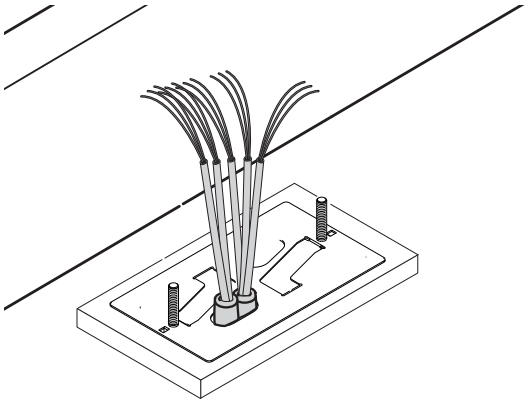

SETTING UP THE OPERATOR

Removethe front cover and the operator casing.

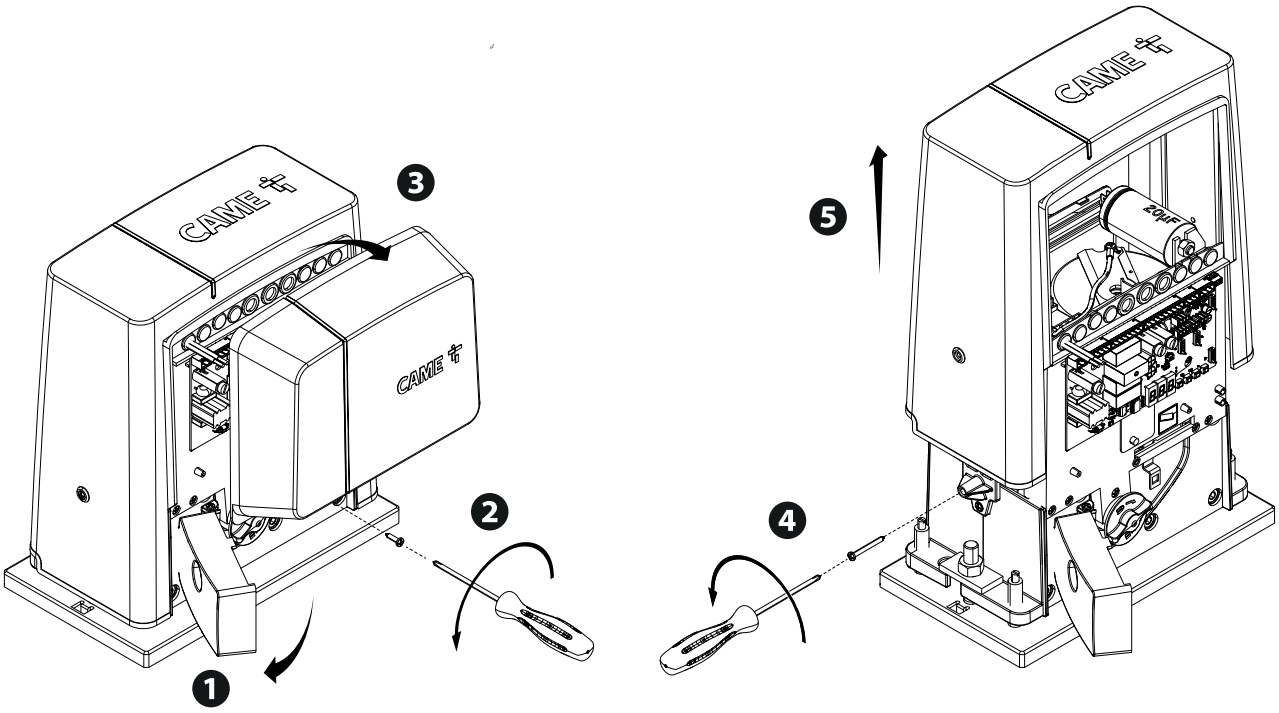

Place the operator on top of the anchoring plate.
Caution! The electric cables must pass under the gearmotor casing and must not touch any parts that may overheat during use, such as the motor or the transformer, and so on).
Lift the gearmotor by 5 to 10 mm from the plate by adjusting the threaded steel feet to allow any subsequent adjustments between pinion and rack.

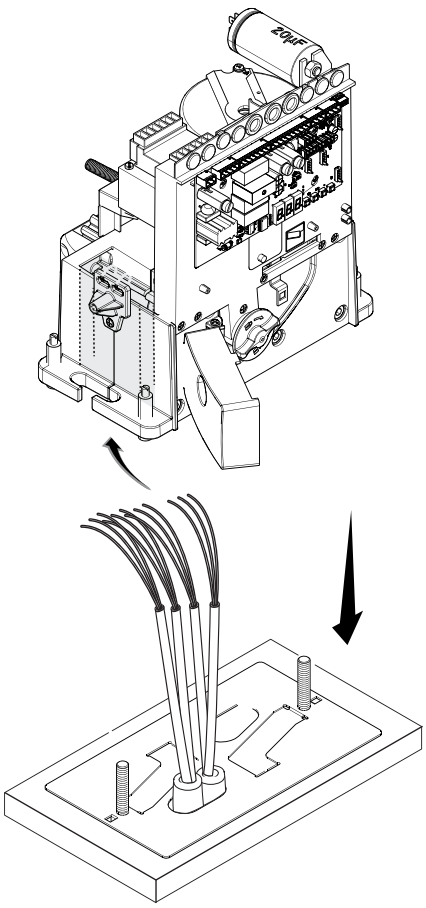

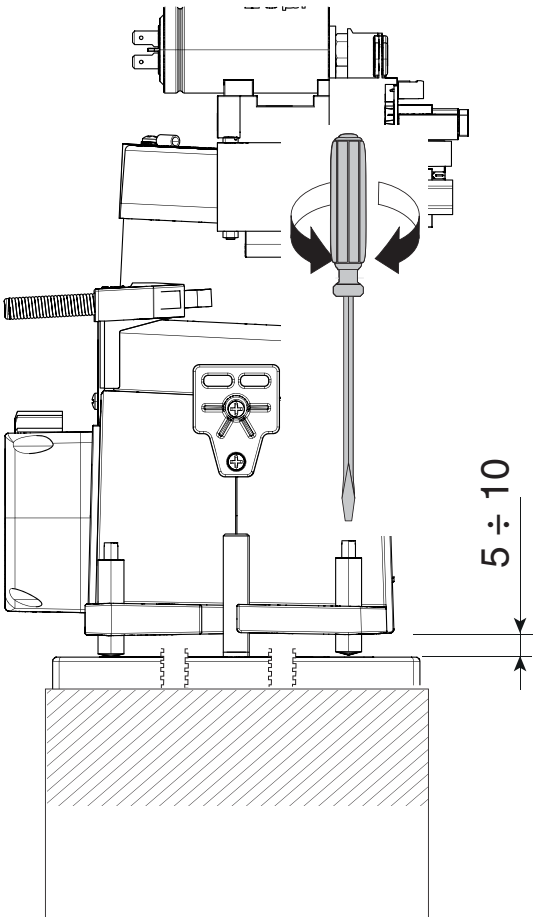

FASTENING THE RACK

📖 If the rack is already set up, the next step should be to adjust the rack-and-pinion coupling distance, otherwise, fasten it:
- release the operator;
- rest the rack above the operator pinion;
- weld or fasten the rack to the gate along its entire length.

To assemble the rack modules, use an extra piece and rest it under the joint, then fasten it using two clamps.

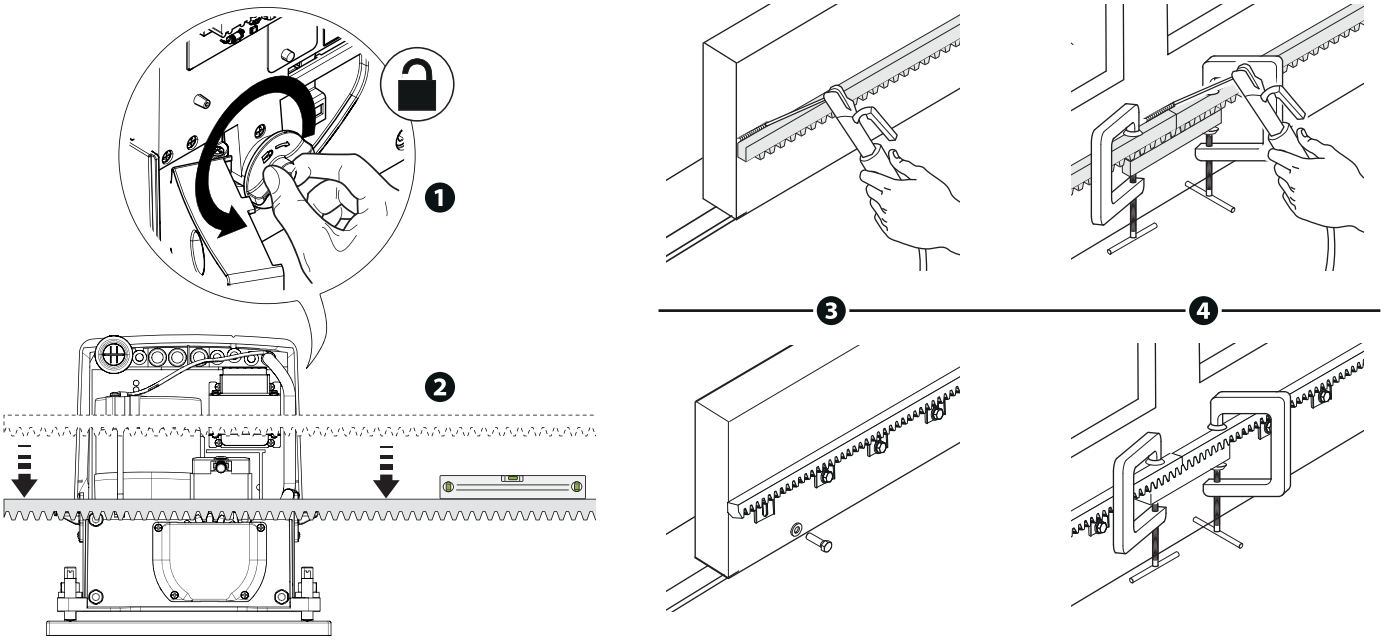

ADJUSTING THE PINION-RACK PAIRING

Manually open and close the gate and adjust the pinion-rack coupling distance using the threaded feet (vertical adjustment) and the holes (horizontal adjustment). This prevents the gate's weight from bearing down on the operator.

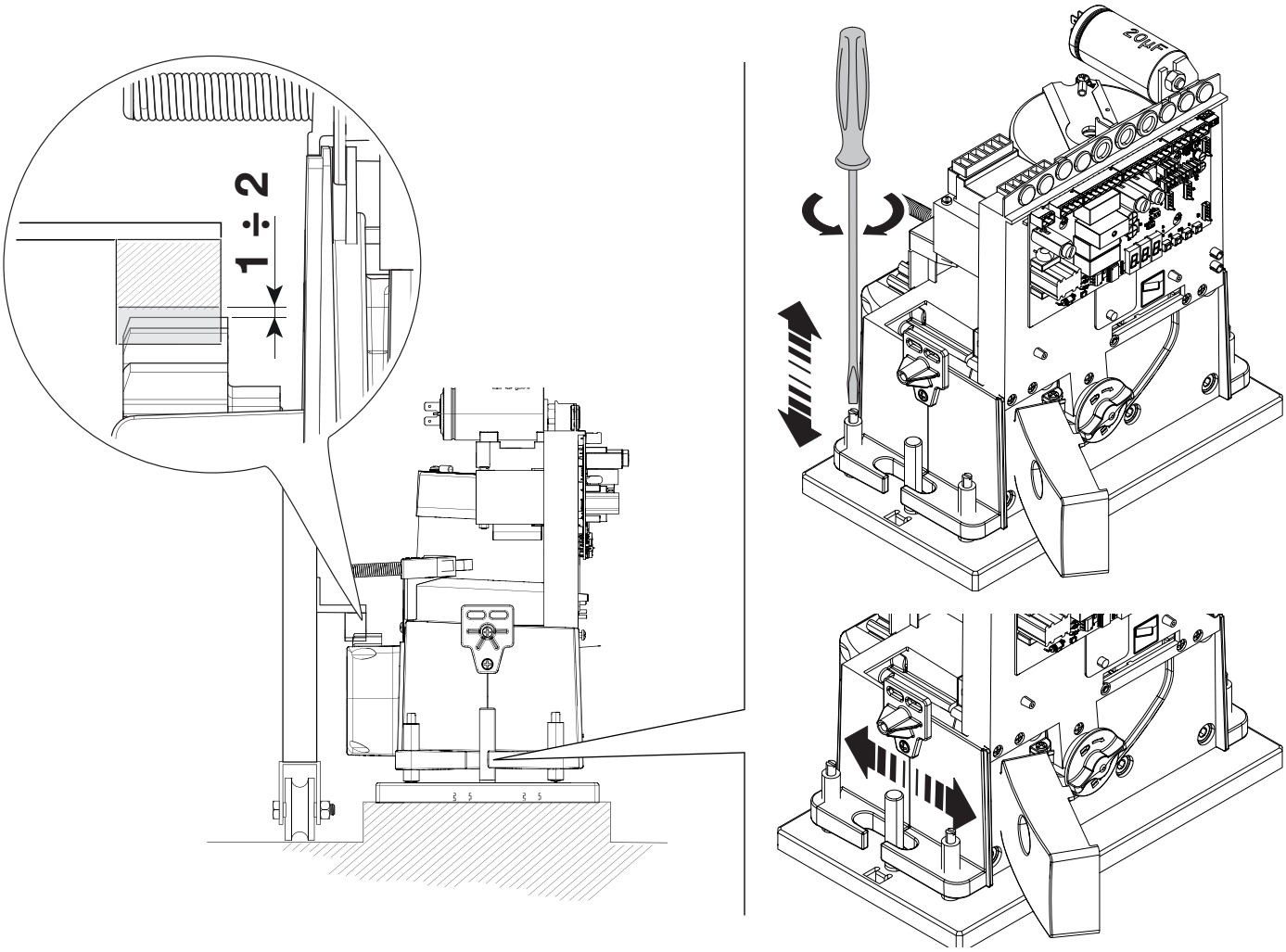

FASTENING THE OPERATOR

Once the adjustments are complete, fasten the operator to the plate using the supplied hardware.

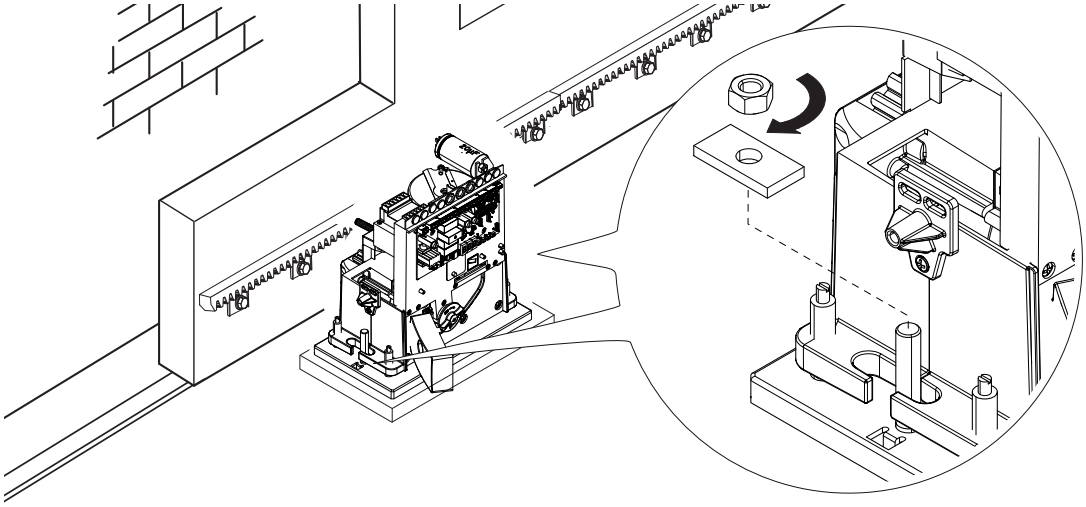

ESTABLISHING THE LIMIT-SWITCH POINTS

For opening:

- open the gate; ❶
- fit the opening limit-switch tab onto the rack until the micro switch activates (spring) and fasten it using the grub screws. ❷❸

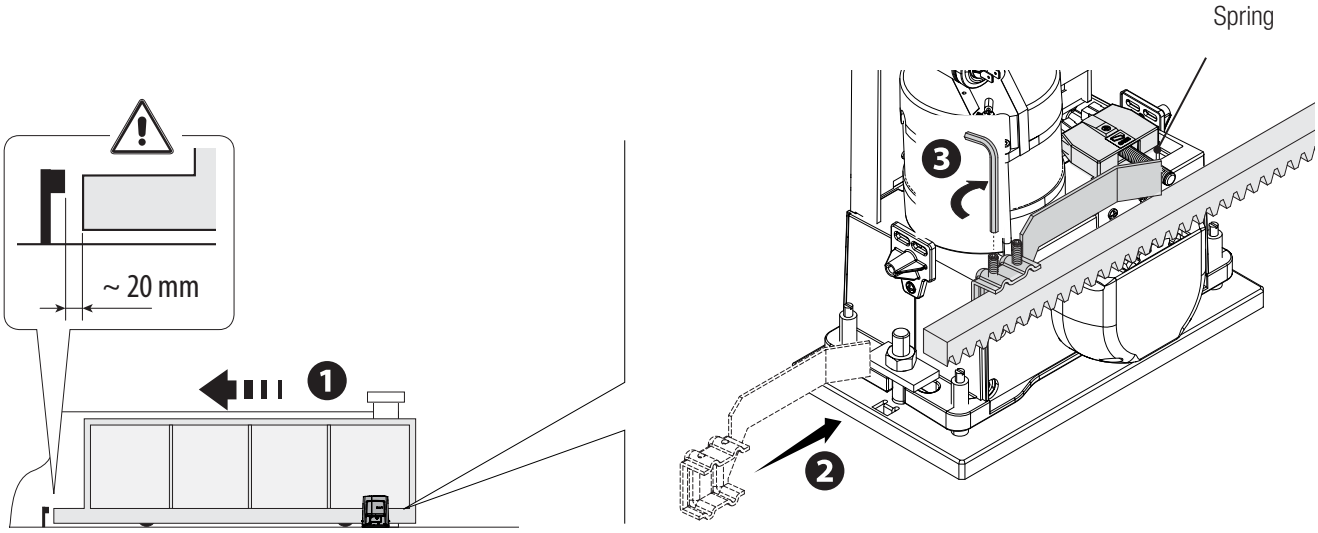

For closing:

- close the gate; ❹
- fit the closing limit-switch tab into the rack until the micro-switch is activated (spring) and fasten it using the grub screws. ❺❻

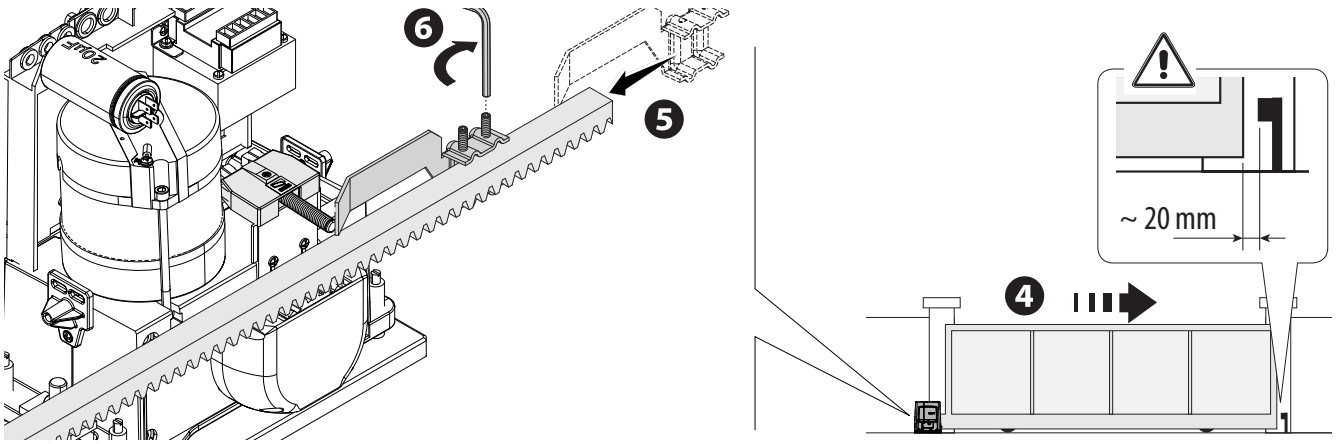

CONTROL BOARD

⚠ Caution! Before doing any work on the control board, cut off the mains power supply, and disconnect any batteries.

The functions available on the input and output contacts, the time adjustments and user management are all set and viewable on the segmented graphic display.

Fuses	ZBX7N
LINE - Line	5 A-F (230 V AC) 8 A-F (120 V AC)
C.BOARD - Card	630 mA-F
ACCESSORIES - Accessories	1 A-F

DESCRIPTION OF PARTS

1. Power supply terminals
2. Gear motor terminals
3. Transformer terminals
4. Control-board fuse
5. Terminals for control and safety devices
6. Fuse accessories
7. Terminals for the RGP1 module
8. Encoder terminals
9. Keypad selector terminal
10. Terminals for limit-switch micro-switches
11. Antenna terminal
12. AF card slot
13. Terminals for transponder selector
14. Terminals for paired of CRP connection
15. Connector for the R700/R800/R900 card
16. Connector for the RIO-CONN card
17. RSE card slot
18. Programming buttons
19. Memory roll card slot
20. Display
21. Power supply on warning LED
22. Line fuse

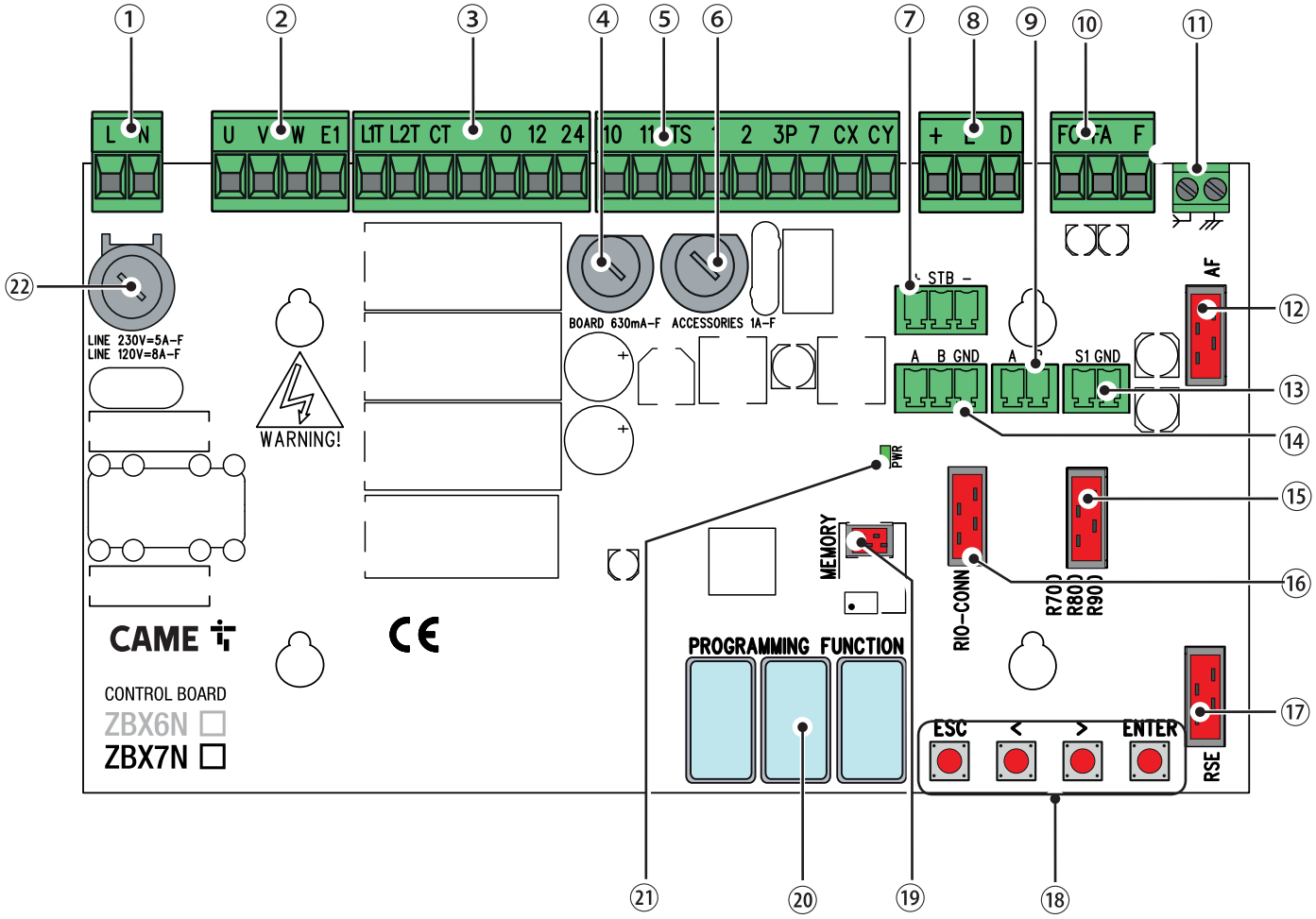

ELECTRICAL CONNECTIONS

⚠ Connect all wires and cables in compliance with the law.
Before connecting all the wires, set up the cables by using cable glands on the control board brace, as shown in the figure.
⚠ The electrical cables must not touch any heated parts such as the motor, transformer, and so on.

Control-board brace cable glands

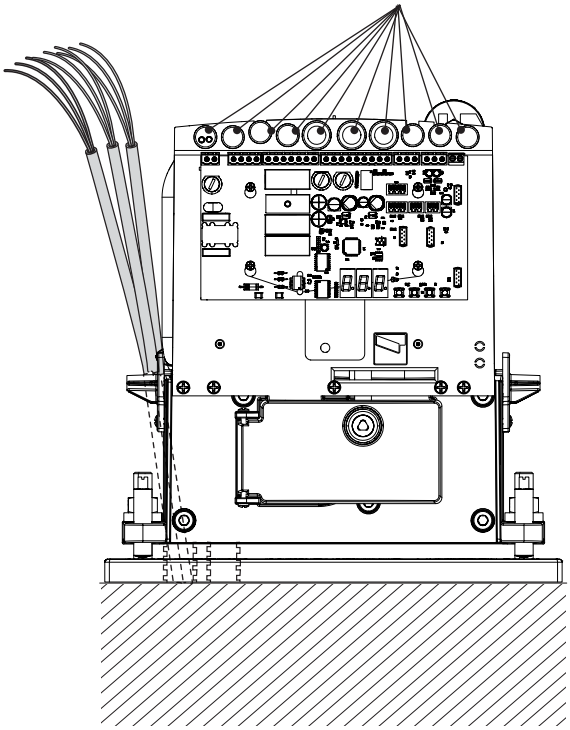

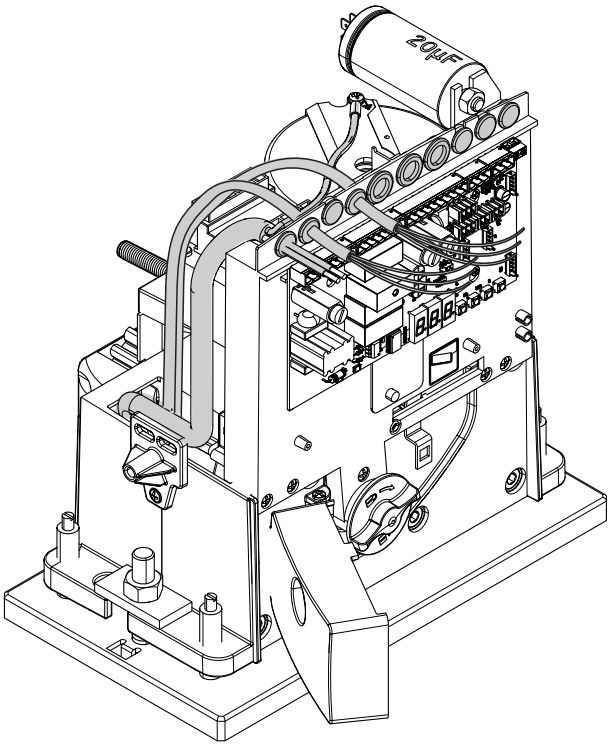

FACTORY WIRING

120/230V (AC) gear motor with Encoder

Mechanical limit switch

Opening limit-switch micro-switch

Closing limit-switch micro-switch

Condenser

ORANGE
WHITE
RED

RED
BLACK

L N | U V W E1 | L1T L2T CT 0 12 24 | 10 11 TS 1 2 3P 7 CX CY | + E D | FC FA F

POWER SUPPLY

120 / 230 V AC 50/60 Hz

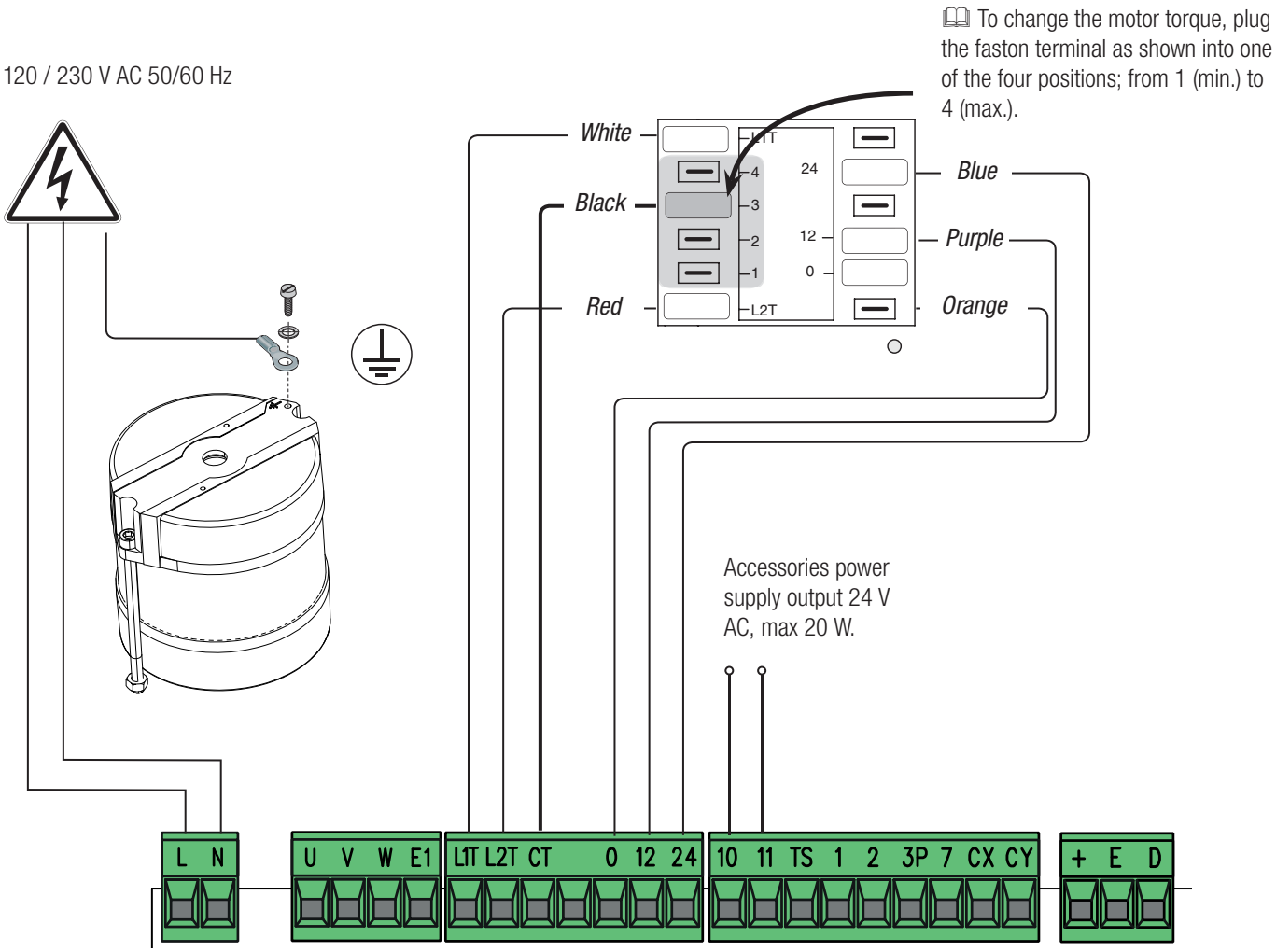

SIGNALING DEVICES

Flashing light connection output (contact rated for: 230 V AC - 25 W max) and/or additional light (contact rated for: 230 V - 60 W max).
See functionF18.

Gate closed warning output (contact rated for: 24 V AC - 3 W max).

Gate open warning output (contact rated for: 24 V AC - 3 W max).

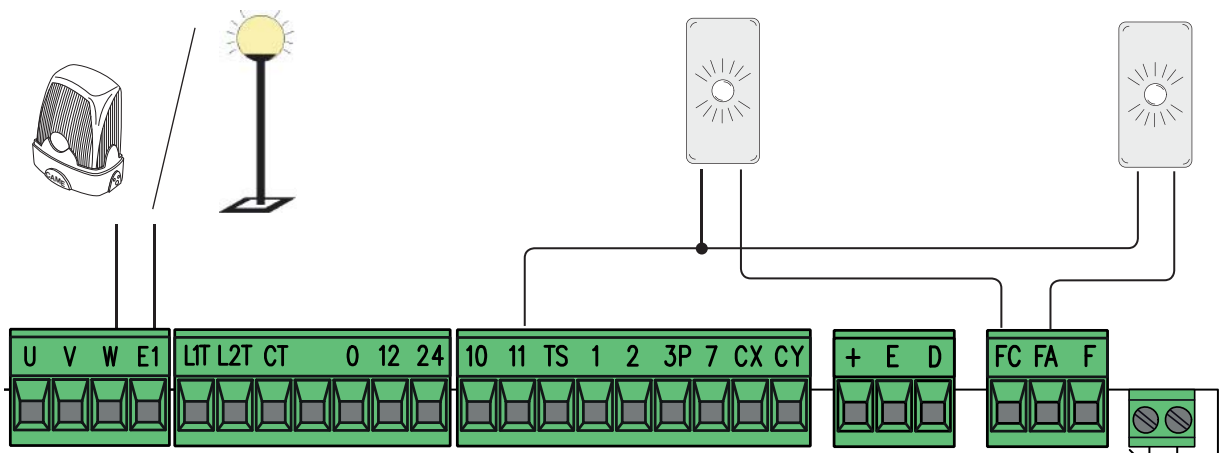

WARNING! For the system to work properly, before fitting any snap-in card (e.g. the AF R800), you MUST CUT OFF THE MAIN POWER SUPPLY and remove any batteries.

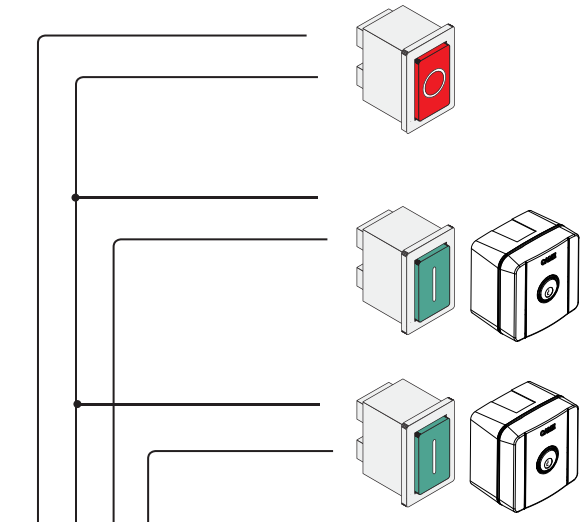

STOP button (NC contact). For stopping the gate while excluding automatic closing. To resume movement either press the control button or any other control device.
📖 **Activate the F1 programming function. If the button is no used, leave this function deactivated.**

PARTIAL OPENING function from control device (NO contact)

OPEN-CLOSE-INVERT (step-step) function from control device (NO contact). Alternatively, from the functions programming you can activate the single command OPEN-STOP-CLOSE-STOP (sequential).
See functionF7.

Antenna with RG58 cable for remote control.

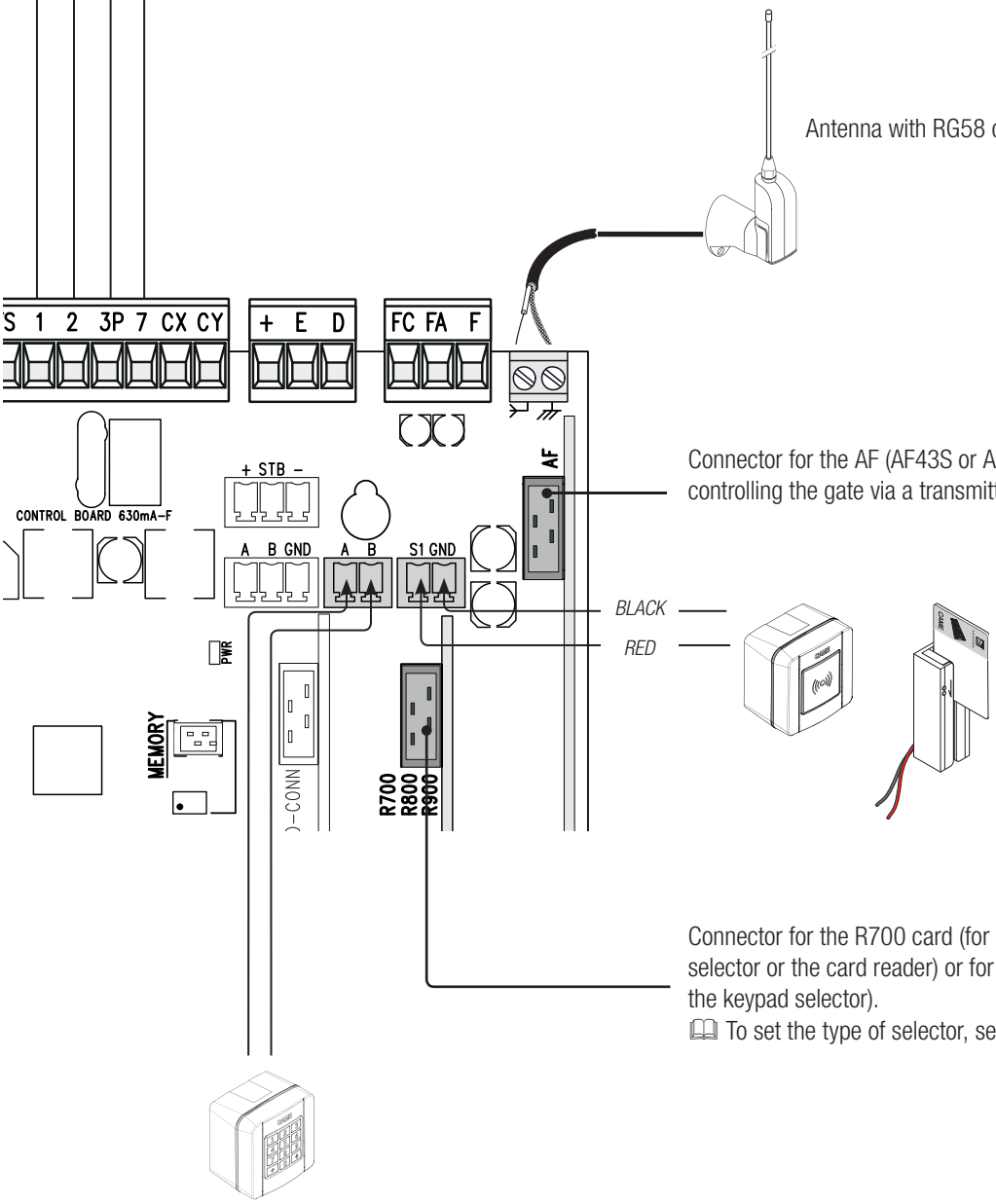

Connector for the AF (AF43S or AF868) card, for controlling the gate via a transmitter.

Transponder or card reader.

Connector for the R700 card (for using the transponder selector or the card reader) or for the R800 card (for using the keypad selector).
📖 To set the type of selector, see functionF14.

Keypad selector.

Photocells

Configure contact CX or CY (NC), safety input for photocells.
See functions F2 (CXinput), or F3 (CY input) in:
- C1 reopening during closing. When the gate is closing, opening the contact triggers the inversion of movement until the gate is fully open again;
- C2 closing during opening. When the gate is opening, opening the contact triggers the inversion of movement until the gate is completely closed.
- C3 partial stop. Stopping of the gate, if it is moving, with consequent automatic closing (if the automatic closing function has been entered);
- C4 obstruction wait. Stopping of the gate, if it is moving, which resumes movement once the obstruction is removed.

🕮 If contacts CX and CY are not used they should be deactivated during programming.

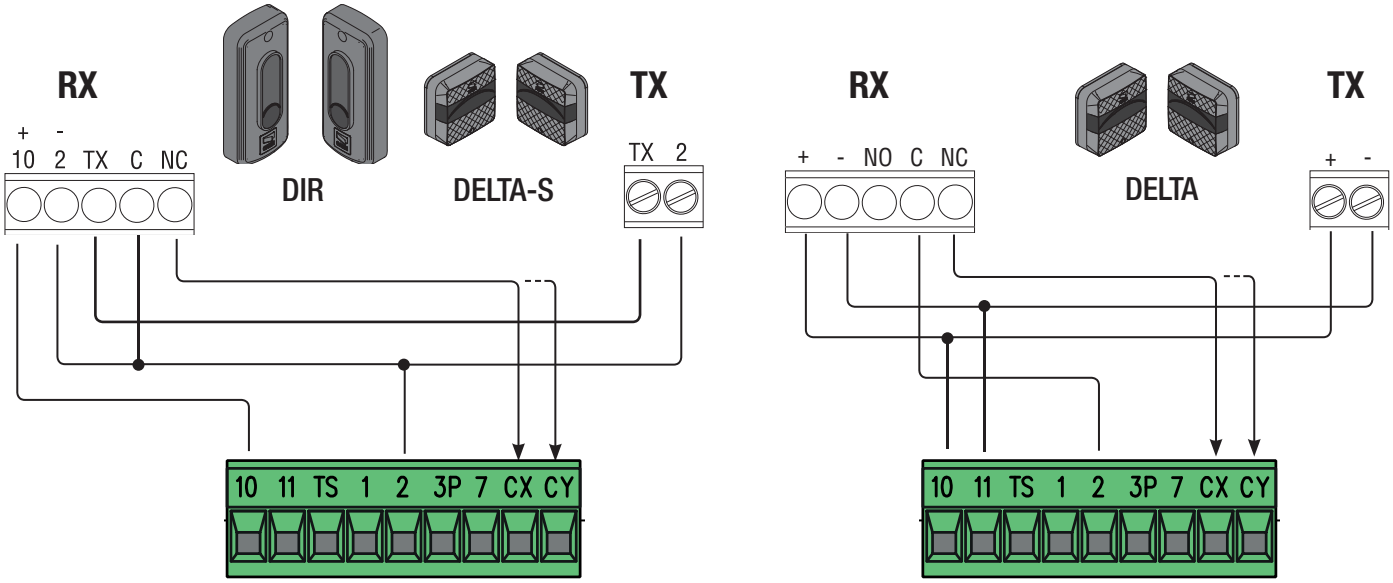

Photocells (safety test)

At each opening and closing command, the control board checks the efficacy of the safety devices.
Any malfunction inhibits any command and the display willshow the Er4 wording.
Enable function F5 in programming.

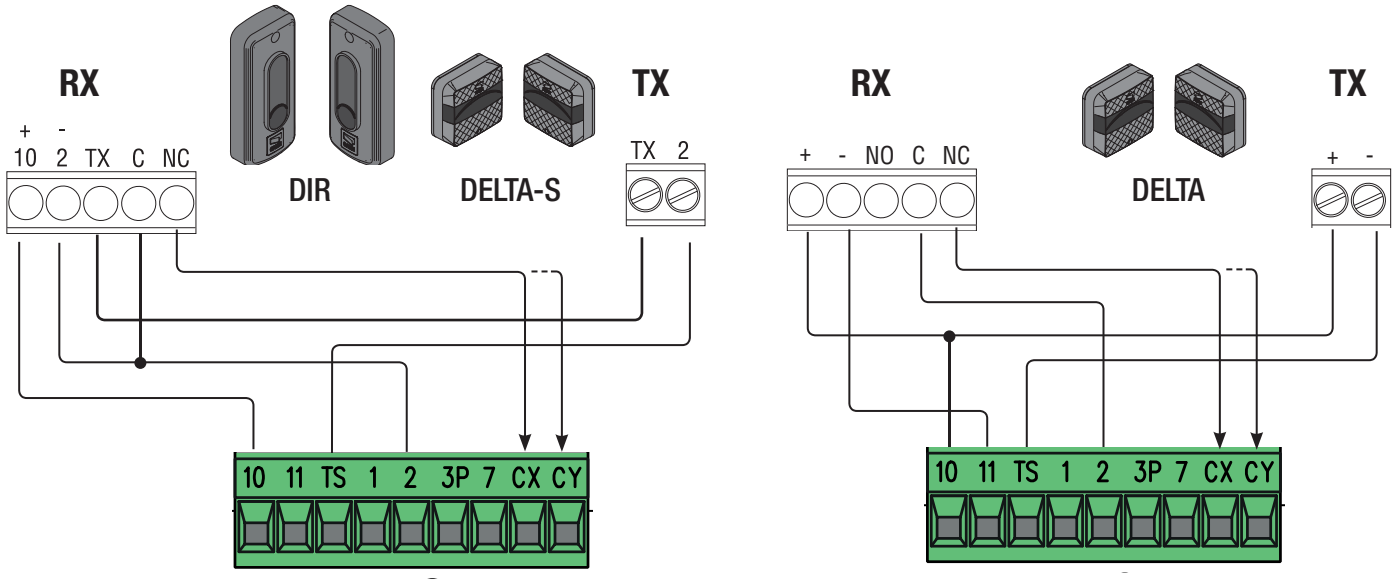

Sensitive Safety Edges

Configure contact CX or CY (NC), safety input for sensitive safety-edges.
See functionsF2 (input CX)or F3 (input CY) in:

- C7 (sensitive safety edges with clean contact) or r7 (sensitive safety edges with 8K2 resistance), reopening during closing. When the gate is closing, opening the contact triggers the inversion of movement until the gate is fully open again;

- C8 (sensitive safety edges with clean contact) or r8 (sensitive safety edge with 8K2 resistance), reclosing during opening. When the gate is opening, opening the contact triggers the inversion of movement until the gate is completely closed.

🕮 If unused, contacts CX and CY should be deactivated during programming.

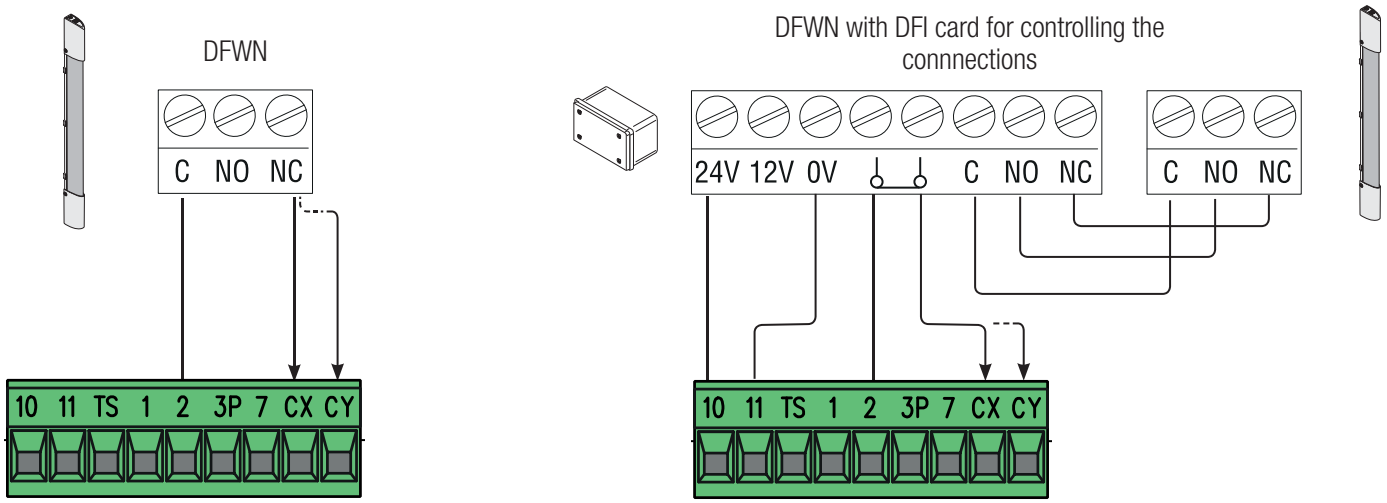

RIO WIRELESS DEVICES

Plug the RIOCN8WS card into its corresponding connector on the control board.
Set the function to be associated to the wireless device (F65, F66, F67 e F68).
Configure the RIOED8WS, RIOPH8WS andRIOLX8WS wireless accessories by following the indications shown in the folder enclosed with each accessory.

🕮 If the devices are not configured with the RIOCN8WS card, the display will read out E18.

⚠ If there are any radio-frequency disturbances to the system, the wireless system will inhibit the normal operation of the operator, and this error will show up on the display as E17.

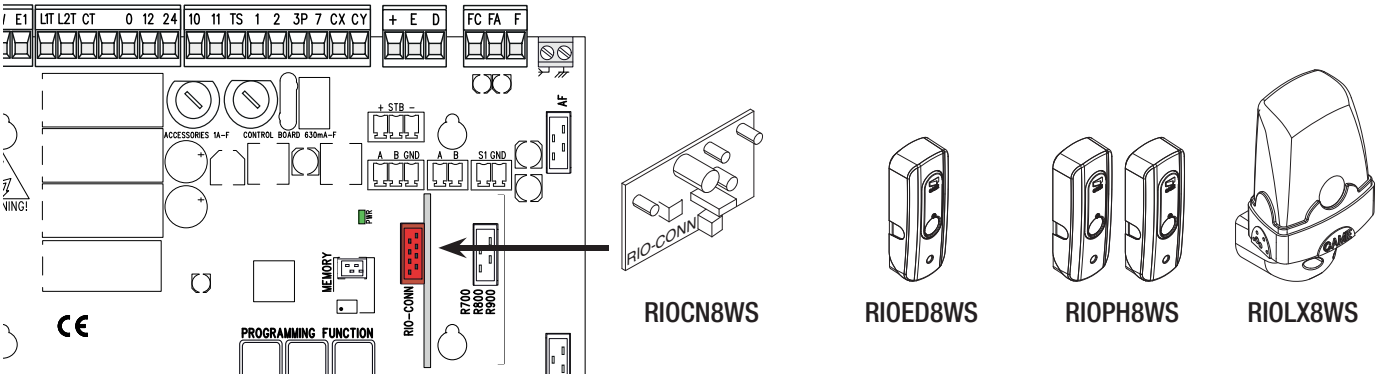

PAIRED OPERATION OR CRP (CAME REMOTE PROTOCOL)

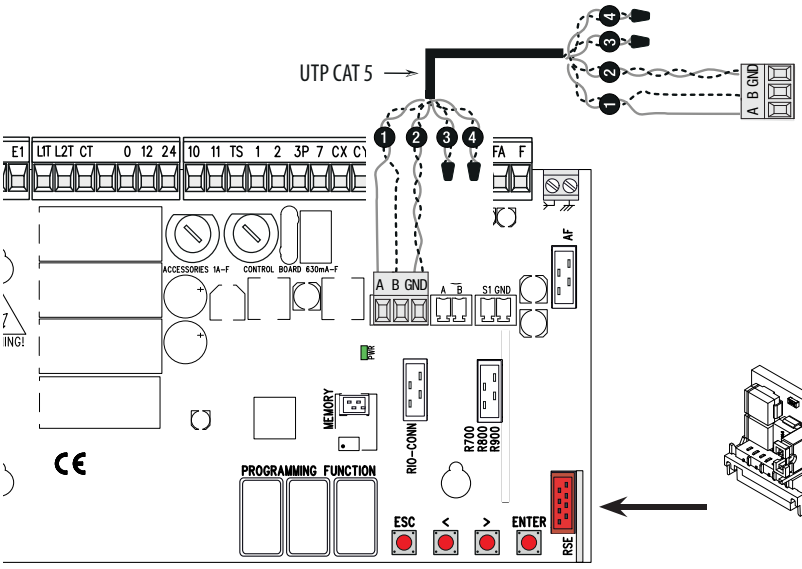

Serial RS485 connection via CRP (Came Remote Protocol) or for paired operation (see chapter called PAIRED OPERATION).

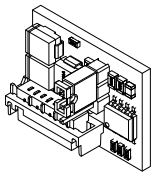

🕮 Fit the RSE card.
WARNING! For the system to work properly, before fitting the control board, you MUST CUT OFF THE POWER MAINS and remove any emergency batteries.

DESCRIPTION OF THE COMMANDS

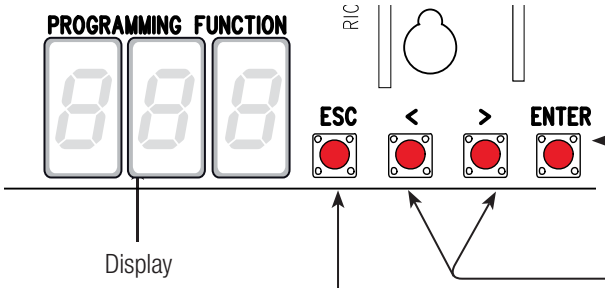

The ENTER key is for:
- entering menus;
- confirming or memorizing set values.

The < > keys are for:
- moving from one item to another;
- increasing or decreasing a value;
- opening and closing the gate (only when testing).

The ESC button is for:
- exiting menus;
- deleting changes;
- stopping the gate (only when testing).

📖 To enter the menu, keep the ENTER button pressed for at least one second.

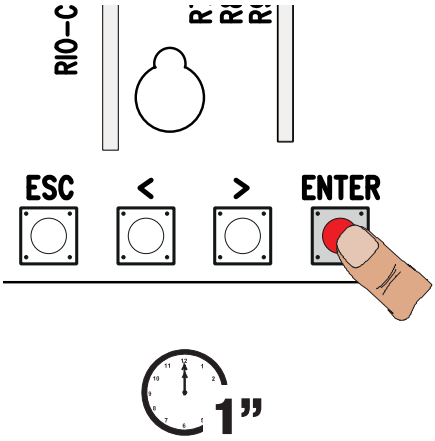

📖 To exit the menu, wait 10 seconds or press ESC.

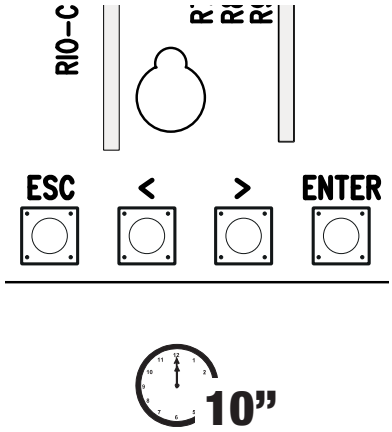

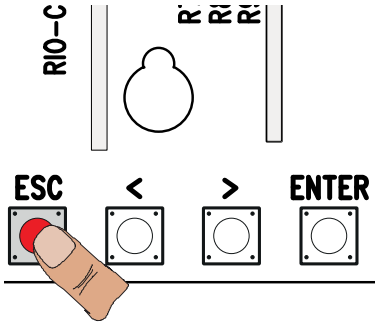

FUNCTIONS MENU

⚠ **When programming, the operator needs to be in stop mode.**

F1	Total stop [1-2]	NC input – Gate stop that excludes any automatic closing; to resume movement, use the control device. The safety device is inserted into (1-2). If unused, select 0. ***OFF (default) / ON***
F2	Input [2-CX]	NCinput – Can associate: C1 = reopening during closing by photocells, C2 = reclosing during opening by photocells, C3 = partial stop, C4 = obstruction wait, C7 = reopening during closing by sensitive safety-edges (with clean contact), C8 = reclosing during opening by sensitive safety-edges (with clean contact), r7 = reopening during closing for sensitive safety edges (8K2 resistive input), - r8 = reclosing during opening for sensitive safety edges (8K2 resistive input). 📖 The C3 Partial stop function only appears if the F 19 Automatic closing time function is activated. ***OFF (default) / 1**=C1 / **2**=C2 / **3**=C3 / **4**=C4 / **7**=C7 / **8**=C8 / **r7**=r7 / **r8**=r8*
F3	Input [2-CY]	NC input – Can associate: C1 = reopening during closing by photocells, C2 = reclosing during opening by photocells, C3 = partial stop, C4 = obstruction wait, C7 = reopening during closing by sensitive safety-edges (with clean contact), C8 = reclosing during opening by sensitive safety-edges (with clean contact), r7 = reopening during closing for sensitive safety edges (8K2 resistive input), - r8 = reclosing during opening for sensitive safety edges (8K2 resistive input). 📖 The C3 Partial stop function only appears if the F 19 Automatic closing time function is activated. ***OFF (default) / 1**=C1 / **2**=C2 / **3**=C3 / **4**=C4 / **7**=C7 / **8**=C8 / **r7**=r7 / **r8**=r8*

F5	Safety test	After every opening or closing command, the board will check whether the photocells are working properly. 🕮 The safety test is always active for wireless devices. 🕮 This function only appears if the photocells have been enabled. ***OFF**= Deactivated (**default**) / **1**=CX / **2**=CY / **4**=CX+CY*
F6	Maintained action	The gate opens and closes by keeping the button pressed. Opening button on contact 2-3P and closing button on contact 2-7. All other control devices, even radio-based ones, are excluded. ***OFF** (**default**) / **ON***
F7	Command [2-7]	From the control device connected to 2-7, it performs the (open-close-invert) step-step, (open-stop-close-stop), sequential, open or close command ***0** = Step-step (**default**) / **1** = Sequential / **2** = Open / **3** = Close*
F8	Command (2-3P)	From the control device connected to 2-3P, it performs a partial opening or only opening of the gate. ***0** = Partial opening **(default) / 1** = Open*
F9	Obstruction detection with motor stopped	With the gate closed, opened or totally stopped, the gearmotor stays idle if the safety devices, that is, photocells or sensitive safety-edges detect an obstruction. ***OFF** (**default**) / **ON***
F11	Encoder	Managing slow-downs, obstruction detections and sensitivity. ***OFF** / **ON** (**default**)*
F14	Sensor type	Setting the type of accessory for controlling the operator. ***0** = command with transponder sensor or magnetic card reader / **1** = command with keypad selector (**default**)*
F18	Additional light	Additional light connection input on W-E1. Flashing light: it flashes during the gate's opening and closing phases. Cycle light: additional external light for increasing illumination in the drive way. It stays on from the moment the leaf starts opening until it again closes completely - including the waiting time before the automatic-closing time. 🕮 The cycle light setting appears only of the automatic closing is activated. ***OFF** = Flashing light (**default**) / **1** = Cycle*
F19	Automatic Closing Time	The automatic-closing wait starts when the opening limit switch point is reached and can be set to between 1 and 180 seconds. The automatic closing does not work if any of the safety devices trigger when an obstruction is detected, or after a total stop, or during a power outage. ***OFF** (**default**) / **1** = 1 second /... / **180** = 180 seconds*
F20	Automatic closing time after partial opening	The wait before the automatic closing starts after a partial opening command for a time of between 1 s and 180 s. The automatic closing does not work if any of the safety devices trigger when an obstruction is detected, or after a total stop, or during a power outage. ***OFF** / **1** = 1 second /... / **10** = 10 seconds (**default**) / **180** = 180 seconds*
F21	Pre-flashing time	Adjusting the pre-flashing time for the flashing light connected to W-E1 before each maneuver. The flashing time is adjustable from one to ten seconds. ***OFF** (**default**) / **1** = 1 second /... / **10** = 10 seconds*
F30	Opening and closing slow-down speed	Gate slow-down speed before the limit-switch when opening and closing. 🕮 This function only appears if the Encoder function is activated. ***OFF** (**default**) / **1** = High / **2** = Average / **3** = Low*
F34	Travel sensitivity	Adjusting obstruction detection sensitivity during gate-leaf travel. 🕮 This function only appears if the Encoder function is activated. ***10** = maximum sensitivity / … / **100** = minimum sensitivity (**default**)*
F35	Slow-down sensitivity	Adjusting obstruction detection sensitivity during slow-down. 🕮 This function only appears when functions F11 and F30 are activated. ***10** = maximum sensitivity / … / **100** = minimum sensitivity (**default**)*
F36	Adjusting the partial opening	Adjustment as a percentage of total travel, during gate opening. 🕮 This function only appears if the Encoder function is activated. ***10** = 10% of the gate travel /... / **80** = 80% of the gate travel (**default**)*
F37	Opening slow-down point	Percentage adjustment of the total door travel, of the opening slow-down starting point. 🕮 This function only appears when functions F11 and F30 are activated. ***5** = 5% of the gate travel /... / **15** = 15% of gate travel (**default**) /... / **30** = 30% of gate travel*

F38	Closing slow-down point	Percentage adjustment of the total door travel, from the closing slow-down starting point. 🕮 This function only appears when functions F11 and F30 are activated. ***5*** *= 5% of the gate travel /... /* ***15*** *= 15% of gate travel (**default**) /... /* ***30*** *= 30% of gate travel*
F48	Maneuver thrust activation	Greater pushing torque that activates during the operator's beginning opening and closing phases. ***OFF (default) / ON***
F49	Managing the serial connection	To enable the paired operating mode or the CRP (Came Remote Protocol). ***OFF (default)*** */* ***1*** *= Paired /* ***3*** *= CRP*
F50	Saving data	Saving users and saved settings in memory roll. 🕮 This function only appears if a memory roll has been fitted into the control board. ***OFF (default) / ON***
F51	Uploading date	Uploading data saved in memory roll. 🕮 This function only appears if a memory roll has been fitted into the control board. ***OFF (default) / ON***
F52	Transferring parameters in paired mode	Uploading settings from Master to Slave. 🕮 This appears only if function F49 is set to Paired. ***OFF (default) / ON***
F54	Openingdirection	For setting the gate opening direction. ***0*** *= Opening left (**default**) /* ***1*** *= Opening right*
F56	Peripheral number	To set the peripheral number from 1 to 255 for each control board when a system is fitted with several operators and features the CRP (Came Remote Protocol) connection system. ***1 ----> 255***
F63	COM speed	For setting the communication speed used in the CRP (Came Remote Protocol) connection system. ***0*** *= 1200 Baud /* ***1*** *= 2400 Baud /* ***2*** *= 4800 Baud /* ***3*** *= 9600 Baud /* ***4*** *= 14400 Baud /* ***5*** *= 19200 Baud /* ***6*** *= 38400 Baud (**default**) /* ***7*** *= 57600 Baud /* ***8*** *= 115200 Baud*
F65	Wireless input RIO-EDGE [T1]	RIO-EDGE wireless safety device associated to a function of choice among those available: P0= stop gate and exclude any automatic closing; to resume movement, use the control device, P7 = reopening during closing, P8 = reclosing during opening. For programming, see the instructions that come with the accessory. 🕮 This function only appears if the RIOCN8WS card is plugged into the control board. ***OFF (default) / P0*** *= P0* ***/ P7*** *= P7* ***/ P8*** *= P8*
F66	Wireless input RIO-EDGE [T2]	RIO-EDGE wireless safety device associated to a function of choice among those available: P0= stop gate and exclude any automatic closing; to resume movement, use the control device, P7 = reopening during closing, P8 = reclosing during opening. For programming, see the instructions that come with the accessory. 🕮 This function only appears if the RIOCN8WS card is plugged into the control board. ***OFF (default) / P0*** *= P0* ***/ P7*** *= P7* ***/ P8*** *= P8*
F67	Wireless input RIO-CELL [T1]	RIO-CELL is associated to any function chosen among those available: P1 = reopening during closing; P2 = reclosing during opening; P3 = partial stop; P4 = obstruction wait. For programming, see the instructions that come with the accessory. 🕮 This function only appears if the RIOCN8WS card is plugged into the control board. 🕮 The P3 function appears only if the F19 function is activated. ***OFF (default) / P1*** *= P1* ***/ P2*** *= P2* ***/ P3*** *= P3 /* ***P4*** *= P4*
F68	Wireless input RIO-CELL [T2]	RIO-CELL is associated to any function chosen among those available: P1 = reopening during closing; P2 = reclosing during opening; P3 = partial stop; P4 = obstruction wait. For programming, see the instructions that come with the accessory. 🕮 This function only appears if the RIOCN8WS card is plugged into the control board. 🕮 The P3 function appears only if the F19 function is activated. ***OFF (default) / P1*** *= P1* ***/ P2*** *= P2* ***/ P3*** *= P3 /* ***P4*** *= P4*
F71	Partial opening time	After an opening command from the button connected to 2-3P, the gate opens for an adjustable time of between five seconds and 40 seconds. 🕮 This function only appears if function F11 is deactivated. ***5*** *= 5 Seconds (**default**) /... /* ***40*** *= 40 Seconds*

U 1	**Entering users**	Entering up to 250 users and associating to each one a function of choice among those included. Use a transmitter or other control device to enter the data (see paragraph called ENTERING A USER WITH AN ASSOCIATED COMMAND). ***1*** *= Step-step command (open-close) /* ***2*** *= Sequential command (open-stop-close-stop) /* ***3*** *= Open only command /* ***4*** *= Partial opening command*
U 2	**Deleting users**	Deleting single users (see paragraph called DELETING SINGLE USERS)
U 3	**Deleting users**	Deleting all users. ***OFF (default)*** */* ***ON*** *= Delete*
U 4	**Decoding the code**	Select the type of transmitter radio coding that you wish to save on the control board. ⚠ When you select a radio coding, all saved transmitter are automatically deleted. 🕮 TWIN's coding lets you save multiple users with the same key (Key block). ***1*** *= all (**default**) /* ***2*** *= Rolling Code /* ***3*** *= TWIN*
A 1	**Motor type**	Select the type of operator used on the system. ***1*** *= BX704AGS /* ***2*** *= BX708AGS*
A 3	**Gate-swing calibration**	Automatic calibration of the gate-leaf swing (see the CALIBRATING SWING paragraph). 🕮 This function only appears if function F11 is activated. ⚠ If the operator is not calibrated, it excludes all commands. ***OFF (default) / ON***
A 4	**Resetting parameters**	Caution! The default settings will be restored. ***OFF (default) / ON***
A 5	**Maneuver count**	It is for viewing the number of maneuvers done. ***OFF (default) / ON***
H 1	**Version**	View the firmware version.

SETTING UP

Once the electrical connections are complete, have skilled staff commission the operator.
Before continuing, make sure the area is free of any obstructions, and that there are mechanical, opening and closing gate stops in place.
Power up and begin configuring the system. **Important!** Start programming by first doing the following functions: F54 (Opening direction) and F1 (Total stop) and A3 (Calibrating gate travel).

Once the programming is done, verify that the operator and all the accessories are working properly. Use the < > keys to open and close the gate and ESC to stop it.

⚠After powering up the system, the first maneuver is always the opening. In this phase, the gate cannot be closed. You will need to wait for the gate to completely open.
⚠ Immediately press the STOP button if any suspicious malfunctions, noises or vibrations occur in the system.

TRAVEL CALIBRATION

⚠ Before calibrating the gate travel, position the gate half-way, check that the maneuvering area is clear of any obstruction and check that there are mechanical opening and closing stops.
⚠ The mechanical gate-stops are obligatory.
Important! During calibration, all safety devices will be disabled.

Select [**A 3**] window. Press ENTER to confirm. ❶
Select [**ON**]. Press ENTER to confirm the automatic travel calibration procedure. ❷
The gate will perform a closing maneuver until it reaches a final stop...❸
...then the gate will perform an opening maneuver until it reaches a final stop. ❹

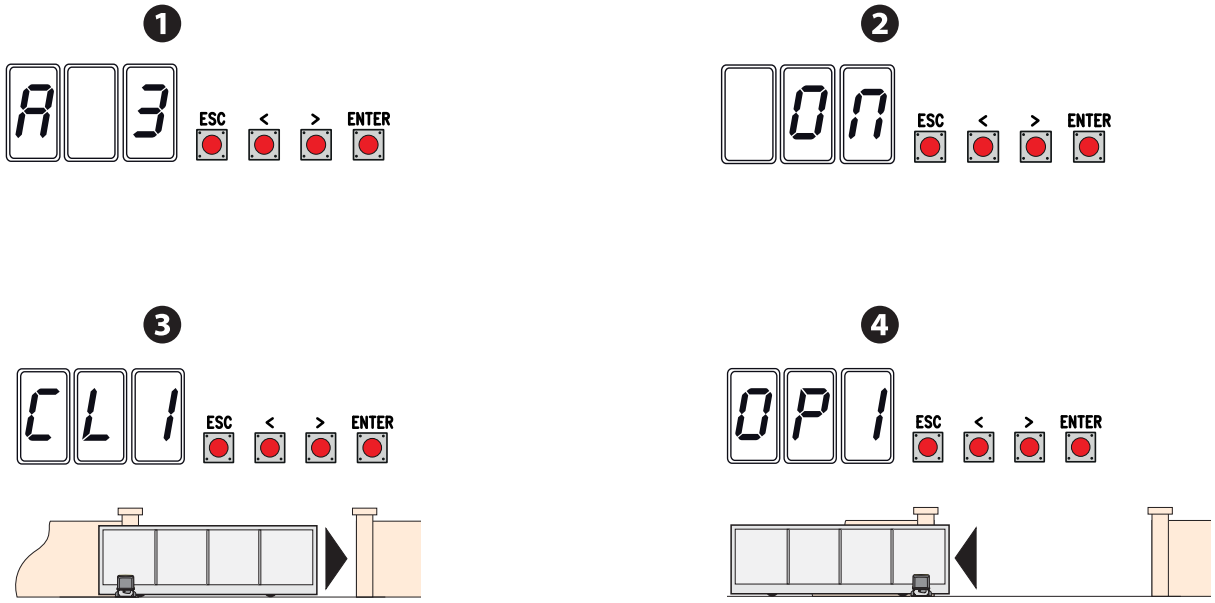

MANAGING USERS

📖 When adding and deleting users, the flashing numbers appearing are those numbers that are available and usable to assign to a new user (max. 250 users).
📖 Before registering the users, make sure the AF radio card is plugged into the connector (see the paragraph called CONTROL DEVICES).

ENTERING USERS WITH AN ASSOCIATED COMMAND

Select **U 1**. Press ENTER to confirm. ❶
Select a command to associate to the user: The commands are:
- **1** = step-step (open-close);
- **2** = - sequential (open-stop-close-stop);
- **3** = only open;
- **4** = partial opening/pedestrian.

Press ENTER to confirm... ❷
... a number between 1 and 250 will start flashing for a few seconds. Send the code from the transmitter or other control device, such as, a keypad selector or a transponder.❸
📖 Note down the user entered **into the LIST OF REGISTERED USERS**.

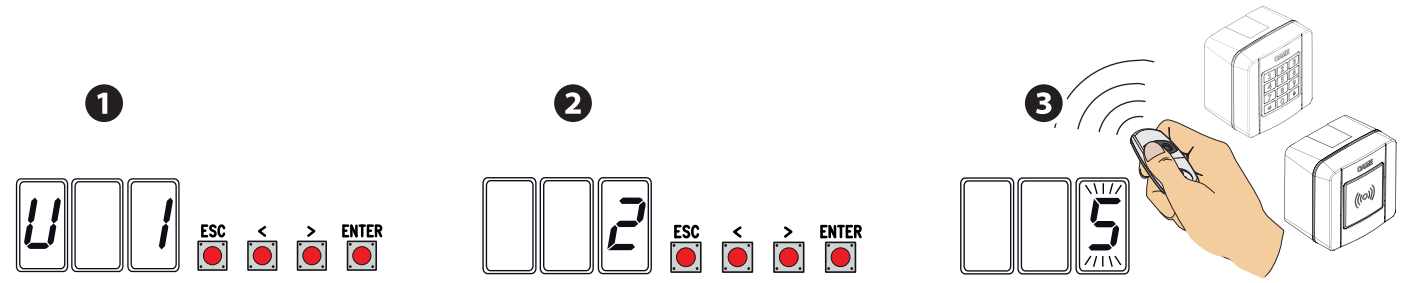

LIST OF REGISTERED USERS

1		48		95	
2		49		96	
3		50		97	
4		51		98	
5		52		99	
6		53		100	
7		54		101	
8		55		102	
9		56		103	
10		57		104	
11		58		105	
12		59		106	
13		60		107	
14		61		108	
15		62		109	
16		63		110	
17		64		111	
18		65		112	
19		66		113	
20		67		114	
21		68		115	
22		69		116	
23		70		117	
24		71		118	
25		72		119	
26		73		120	
27		74		121	
28		75		122	
29		76		123	
30		77		124	
31		78		125	
32		79		126	
33		80		127	
34		81		128	
35		82		129	
36		83		130	
37		84		131	
38		85		132	
39		86		133	
40		87		134	
41		88		135	
42		89		136	
43		90		137	
44		91		138	
45		92		139	
46		93		140	
47		94		141	

142		179		216	
143		180		217	
144		181		218	
145		182		219	
146		183		220	
147		184		221	
148		185		222	
149		186		223	
150		187		224	
151		188		225	
152		189		226	
153		190		227	
154		191		228	
155		192		229	
156		193		230	
157		194		231	
158		195		232	
159		196		233	
160		197		234	
161		198		235	
162		199		236	
163		200		237	
164		201		238	
165		202		239	
166		203		240	
167		204		241	
168		205		242	
169		206		243	
170		207		244	
171		208		245	
172		209		246	
173		210		247	
174		211		248	
175		212		249	
176		213		250	
177		214			
178		215			

DELETING SINGLE USERS

Select **U 2**. Press ENTER to confirm. ❶

Use the arrow keys select the number of the user you wish to delete. Press ENTER to confirm...❷

... CLr will appear on **the** screen to confirm deletion. ❸

❶

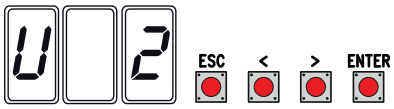

❷

❸

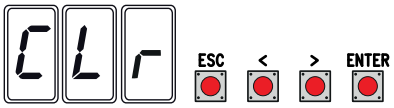

SAVING AND UPLOADING ALL DATA (USERS AND CONFIGURATION) WITH THE MEMORY ROLL

Procedure for memorizing all of the system's user and configuration data by using the Memory Roll, so they can be used with another control board, even on another system.

Caution! Fitting and extracting the Memory Roll must be done with the mains power disconnected.
Fit the Memory Roll into the its corresponding connector on the control board. ❶
Select **ON** from the **F50** and press ENTER to confirm the saving of data in the Memory Roll. ❷

Extract the Memory roll and fit it into the connector of another control board. ❸
Select **ON** from the **F51** and press ENTER to confirm the uploading of data into the Memory Roll. ❹

📖 After memorizing the data, it is best to remove the Memory roll.

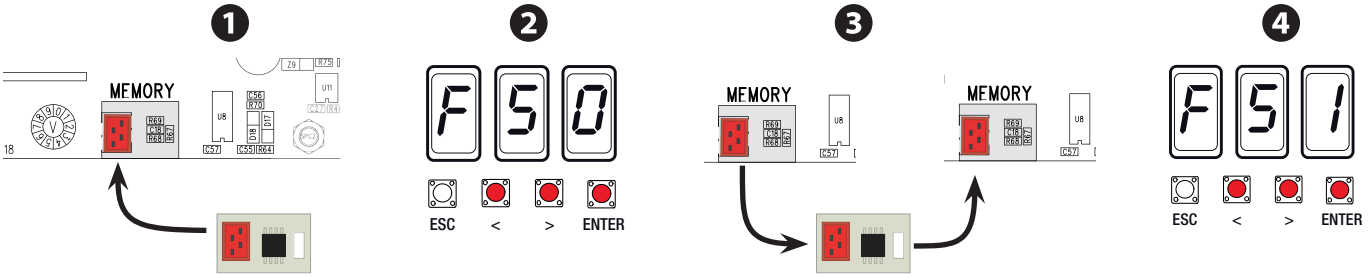

Memory roll

Memory roll

ERROR MESSAGES

📖 The error messages appear on the display.

E1	Calibration error.
E2	Calibrating Encoder.
E3	Encoder is broken.
E4	Safety test error.
E7	Insufficient working time.
E8	Release hatch open.
E9	Closing obstruction.
E10	Opening obstruction.
E11	Maximum number of obstructions detected.
E15	Incompatible transmitter error.
E17	Wireless system error.
E 18	Missing wireless system configuration

FINAL OPERATIONS

Once the operator is up and running and the users are registered, refit and fasten the covers without pinching any wires.

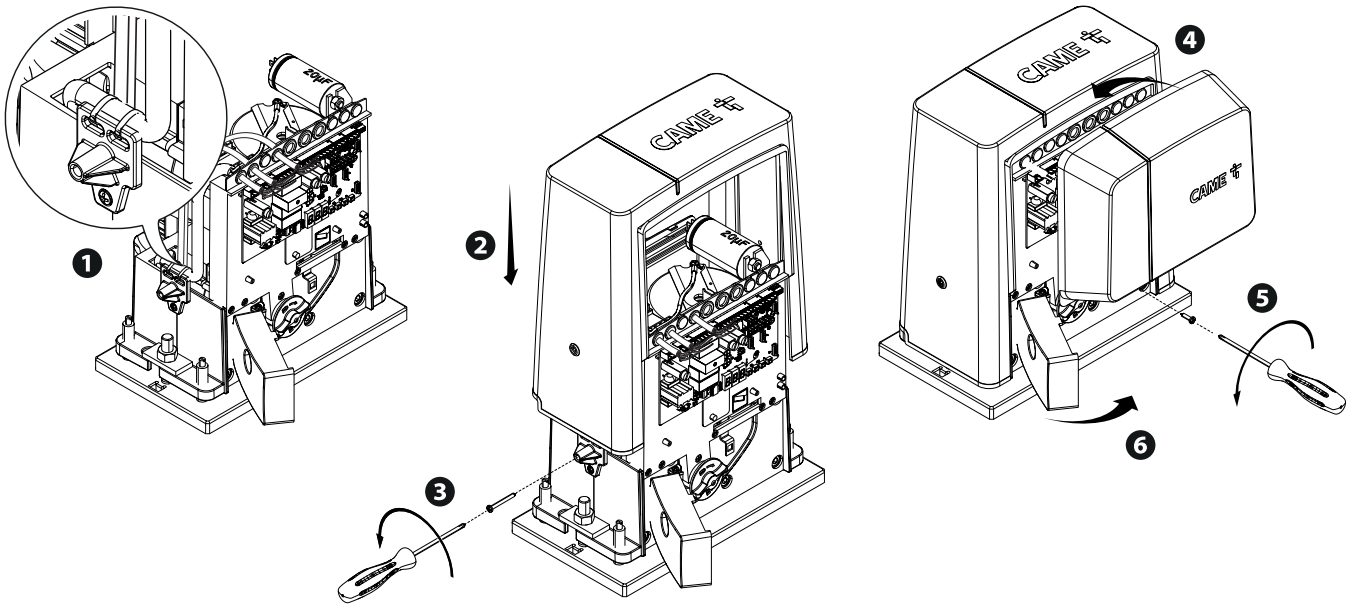

WHAT TO DO IF ...

ISSUES	POSSIBLE CAUSES	POSSIBLE FIXES
It neither opens nor closes	• Power supply is missing • The gear motor is stuck • The transmitter emits a weak signal or no signal • Control buttons or selectors stuck	• Check main power supply • Lock the gearmotor • Replace the batteries • Check the state of all devices
The gate opens but does not close	• The photocells are working	• Check that there are no obstructions in the photocells' area of operation

PAIRED OPERATION

Electrical wiring

- Fit the RSE card into the connector on the control panel of both operators;
Connect the two panels by using a CAT 5 (max 1,000 m type cable to terminals A-A / B-B / GND-GND, see paragraph called PAIRED OPERATION;
Connect all of the control and safety devices on the MASTER operator's control panel.

Saving users

Execute the procedure, to add a user with an associated command, on the MASTER panel.

Programming

Start by performing the following settings only on the MASTER control panel:
- select 1 (paired mode) from the F49 function and press ENTER to confirm;
- select the opening direction from the F54 function and press ENTER to confirm;
- select ON from the F52 function and press ENTER to confirm the transferring of the parameters to paired mode;
- select ON from function A3 and press ENTER to perform the gate travel calibration.

📖 The programming keys on the SLAVE control panel are disabled.

Operating modes

❶ Either STEP-STEP or ONLY OPEN command. Both leaves open.
❷PARTIAL/PEDESTRIAN OPENING command. Only the MASTER operator's leaf opens.
For the types of command that can be selected and paired to users, see the ENTERING USERS WITH ASSOCIATED COMMANDS.

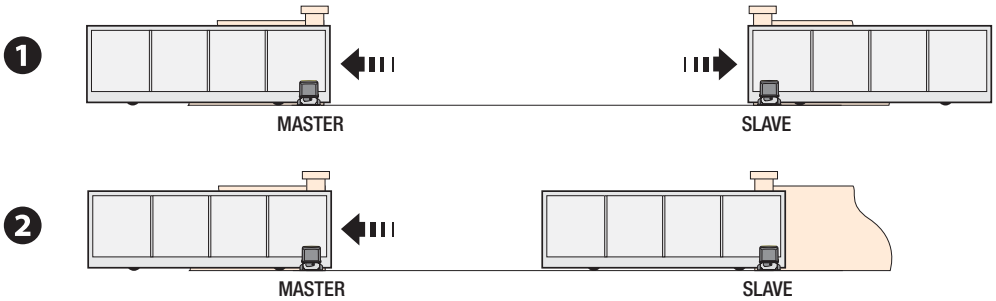

DISMANTLING AND DISPOSAL

☞ CAME CANCELLI AUTOMATICI S.p.A. applies a certified Environmental Management System at its premises, which is compliant with the UNI EN ISO 14001 standard to ensure the environment is safeguarded.
Please continue safeguarding the environment. At CAME we consider it one of the fundamentals of our operating and market strategies. Simply follow these brief disposal guidelines:
⚽ DISPOSING OF THE PACKAGING
The packaging materials (cardboard, plastic, and so on) should be disposed of as solid household waste, and simply separated from other waste for recycling.
Always make sure you comply with local laws before dismantling and disposing of the product.
DISPOSE OF RESPONSIBLY!
⚽ DISMANTLING AND DISPOSAL
Our products are made of various materials. Most of these (aluminum, plastic, iron, electrical cables) are classified as solid household waste. They can be recycled by separating them before dumping at authorized city plants.
Whereas other components (control boards, batteries, transmitters, and so on) may contain hazardous pollutants.
These must therefore be disposed of by authorized, certified professional services.
Before disposing, it is always advisable to check with the specific laws that apply in your area.
DISPOSE OF RESPONSIBLY!

DICHIARAZIONE DI INCORPORAZIONE allegato /DECLARATIONOF INCORPORATION annex / ERKLÄRUNG FÜR DEN EINBAU anhang / DECLARATION D'INCORPORATION annexe / DECLARACIÓN DE INCORPORACIÓN anexo / DECLARAÇÃO DE INCORPORAÇÃO anexo / DEKLARACJA WBUDOWANIA załączniku / INBOUWVERKLARING bijlage IIB - 2006/42/CE

Fabbricante / Manufacturer / Hersteller / Fabricant / Fabricante / Fabricante / Wytwórca / Fabrikant

Came S.p.a.

indirizzo / address / adresse / adresse / direcciòn / endereço / adres / adres

Via Martiri della Libertà 15 - 31030 Dosson di Casier, Treviso - Italy

DICHIARA CHE LE AUTOMAZIONI PER CANCELLI SCORREVOLI / DECLARES THAT THE DRIVES FOR SLIDING GATES / ERKLÄRT DASS DIE AUTOMATISIERUNGEN FÜR SCHIEBETORE / DECLARE QUE LES AUTOMATISATIONS POUR PORTAILS COULISSANTS / DECLARA QUE LAS AUTOMATIZACIONES PARA PUERTAS CORREDERAS / DECLARA QUE AS AUTOMATIZAÇÕES PARA PORTÕES DE CORRER / OSWIADCZA ZE AUTOMATYKA DO BRAM PRZESUWNYCH / VERKLAART DAT DE AUTOMATISERING VOOR SCHUIFHEKKEN

BX704AGS
BX708AGS
BX708RGS

SONO CONFORMI ALLE DISPOSIZIONI DELLE SEGUENTI DIRETTIVE / THEY COMPLY WITH THE PROVISIONS OF THE FOLLOWING DIRECTIVES / DEN VORGABEN DER FOLGENDEN RICHTLINIEN ENTSPRECHEN / SONT CONFORMES AUX DISPOSITIONS DES DIRECTIVES SUIVANTES / CUMPLEN CON LAS DISPOSICIONES DE LAS SIGUIENTES DIRECTIVAS / ESTÃO DE ACORDO COM AS DISPOSIÇÕES DAS SEGUINTES DIRECTIVAS / SA ZGODNE Z POSTANOWIENIAMI NASTEPUJACYCH DYREKTYW EUROPEJSKICH / VOLDOEN AAN DE VOORSCHRIFTEN VAN DE VOLGENDE RICHTLIJNEN:

- COMPATIBILITA' ELETTROMAGNETICA / ELECTROMAGNETIC COMPATIBILITY / ELEKTROMAGNETISCHE VERTRÄGLICHKEIT / COMPATIBILITÉ ÉLECTROMAGNÉTIQUE / COMPATIBILIDAD ELECTROMAGNÉTICA / COMPATIBILIDADE ELETROMAGNÉTICA / KOMPATYBILNOŚCI ELEKTROMAGNETYCZNEJ / ELEKTROMAGNETISCHE COMPATIBILITEIT : 2014/30/UE.

Riferimento norme armonizzate ed altre norme tecniche / Refer to European regulations and other technical regulations / Harmonisierte Bezugsnormen und andere technische Vorgaben / Référence aux normes harmonisées et aux autres normes techniques / Referencia normas armonizadas y otras normas técnicas / Referência de normas harmonizadas e outras normas técnicas / Odnosne normy ujednolicone i inne normy techniczne / Geharmoniseerde en andere technische normen waarnaar is verwezen

EN 61000-6-2:2005
EN 61000-6-3:2007+A1:2011
EN 62233:2008
EN 60335-1:2012+A11:2014
EN 60335-2-103:2015

RISPETTANO I REQUISITI ESSENZIALI APPLICATI: / MEET THE APPLICABLE ESSENTIAL REQUIREMENTS: / DEN WESENTLICHEN ANGEWANDTEN ANFORDERUNGEN ENTSPRECHEN: / RESPECTENT LES CONDITIONS REQUISES NECESSAIRES APPLIQUEES: / CUMPLEN CON LOS REQUISITOS ESENCIALES APLICADOS: / RESPEITAM O REQUISITOS ESSENCIAIS APLICADOS: / SPEŁNIAJA PODSTAWOWE WYMAGANE WYRUNKI: / VOLDOEN AAN DE TOEPASBARE MINIMUM EISEN:

1.1.3; 1.1.5; 1.2.1; 1.2.2; 1.3.2; 1.3.7; 1.3.8.1; 1.4.1; 1.4.2; 1.5.1; 1.5.6; 1.5.8; 1.5.9; 1.5.9; 1.5.13; 1.6.1; 1.6.3; 1.6.4; 1.7.1; 1.7.2; 1.7.4

PERSONA AUTORIZZATA A COSTITUIRE LA DOCUMENTAZIONE TECNICA PERTINENTE / PERSON AUTHORISED TO COMPILE THE RELEVANT TECHNICAL DOCUMENTATION / PERSON DIE BEVOLLMÄCHTIGT IST, DIE RELEVANTEN TECHNISCHEN UNTERLAGEN ZUSAMMENZUSTELLEN / DOCUMENTATION TECHNIQUE SPÉCIFIQUE D'AUTORISATION A CONSTRUIRE DE / PERSONA FACULTADA PARA ELABORAR LA DOCUMENTACIÓN TÉCNICA PERTINENTE / PESSOA AUTORIZADA A CONSTITUIR A DOCUMENTAÇÃO TÉCNICA PERTINENTE / OSOBA UPOWAZNIONA DO ZREDAGOWANIA DOKUMENTACJI TECHNICZNEJ / DEGENE DIE GEMACHTIGD IS DE RELEVANTE TECHNISCHE DOCUMENTEN SAMEN TE STELLEN.

CAME S.p.a.

La documentazione tecnica pertinente è stata compilata in conformità all'allegato VIIB. / The pertinent technical documentation has been drawn up in compliance with attached document VIIB. / Die relevante technische Dokumentation wurde entsprechend der Anlage VIIB ausgestellt. / La documentation technique spécifique a été remplie conformément à l'annexe IIB / La documentación técnica pertinente ha sido rellenada en cumplimiento con el anexo VIIB. / A documentação técnica pertinente foi preenchida de acordo com o anexo VIIB. / Odnosna dokumentacja techniczna została zredagowana zgodnie z załącznikiem VIIB. / De technische documentatie terzake is opgesteld in overeenstemming met de bijlage VIIB.

CAME S.p.a. si impegna a trasmettere, in risposta a una richiesta adeguatamente motivata delle autorità nazionali, informazioni pertinenti sulle quasi macchine, e / Came S.p.A., following a duly motivated request from the national authorities, undertakes to provide information related to the quasi machines, and / Die Firma Came S.p.A. verpflichtet sich auf eine angemessen motivierte Anfrage der staatlichen Behörden Informationen über die unvollständigen Maschinen, zu übermitteln, und / Came S.p.A. s'engage à transmettre, en réponse à une demande bien fondée de la part des autorités nationales, les renseignements relatifs aux quasi machines / Came S.p.A. se compromete a transmitir, como respuesta a una solicitud adecuadamente fundada por parte de las autoridades nacionales, informaciones relacionadas con las cuasimáquinas / Came S.p.A. compromete-se em transmitir, em resposta a uma solicitação motivada apropriadamente pelas autoridades nacionais, informações pertinentes às partes que componham máquinas / Came S.p.A. zobowiązuje się do udzielenia informacji dotyczących maszyn nieukończonych na odpowiednio umotywowaną prośbę, złożoną przez kompetentne organy państwowe / Came S.p.A. verbindt zich ertoe om op met redenen omkleed verzoek van de nationale autoriteiten de relevante informatie voor de niet voltooide machine te verstrekken,

VIETA / FORBIDS / VERBIETET / INTERDIT / PROHIBE / PROIBE / ZABRANIA SIE / VERBIEDT

la messa in servizio finchè la macchina finale in cui deve essere incorporata non è stata dichiarata conforme, se del caso alla 2006/42/CE. / commissioning of the above mentioned until such moment when the final machine into which they must be incorporated, has been declared compliant, if pertinent, to 2006/42/CE / die Inbetriebnahme bevor die „Endmaschine" in die die unvollständige Maschine eingebaut wird, als konform erklärt wurde, gegebenenfalls gemäß der Richtlinie 2006/42/EU. / la mise en service tant que la machine finale dans laquelle elle doit être incorporée n'a pas été déclarée conforme, le cas échéant, à la norme 2006/42/CE. / la puesta en servicio hasta que la máquina final en la que será incorporada no haya sido declarada de conformidad de acuerdo a la 2006/42/CE / a colocação em funcionamento, até que a máquina final, onde devem ser incorporadas, não for declarada em conformidade, se de acordo com a 2006/42/CE. / Uruchomienia urządzenia do czasu, kiedy maszyna, do której ma być wbudowany, nie zostanie oceniona jako zgodna z wymogami dyrektywy 2006/42/WE, jeśli taka procedura była konieczna. / deze in werking te stellen zolang de eindmachine waarin de niet voltooide machine moet worden ingebouwd in overeenstemming is verklaard, indien toepasselijk met de richtijn 2006/42/EG.

Dosson di Casier (TV)
30 Novembre / November / November / Novembre / Noviembre / Novembro / Listopad / November 2017

Legale Rappresentante / Legal Representative /Gesetzlicher Vertreter / Representant Legal / Representante Legal / Representante Legal / Prawny Przedstawiciel / Juridische Vertegenwoordiger

Paolo Menuzzo

Fascicolo tecnico a supporto / Supporting technical dossier / Unterstützung technische Dossier / soutenir dossier technique / apoyo expediente técnico / apoiar dossier técnico / wspieranie dokumentacji technicznej / ondersteunande technische dossier: 801MS-0020

Came S.p.a.
Via Martiri della Libertà, 15 - 31030 Dosson di Casier - Treviso - Italy - Tel. (+39) 0422 4940 - Fax (+39) 0422 4941
info@came.it - www.came.com
Cap. Soc. 1.610.000,00 € - C.F. e P.I. 03481280265 - VAT IT 03481280265 - REA TV 275359 - Reg Imp. TV 03481280265

The contents of this manual may change, at any time, and without notice.

CAME

CAME.COM

CAME S.P.A.
Via Martiri Della Libertà, 15
31030 Dosson di Casier - Treviso - Italy
tel. (+39) 0422 4940 - fax. (+39) 0422 4941

Manual **FA00945-EN** - 01/2018 - © CAME S.p.A. - Translated original instructions